C H A P T E R - III.

LARGE DEFLECTIONS OF SANDWICH PLATES OF ORTHOTROPIC MATERIALS — A NEW APPROACH

C H A P T E R - III.

LARGE DEFLECTIONS OF SANDWICH PLATES WITH ORTHOTROPIC CORES — A NEW APPROACH *

P A P E R - I

A B S T R A C T

In this paper large deflections of sandwich plates with orthotropic cores have been investigated following a new approach. To test the accuracy of the method, Classical Equations of sandwich plates have been solved and given in the appendix. It has been observed that the results of the present study are in excellent agreement with those obtained from the Classical Equations.

GOVERNING EQUATIONS

First we posit a rectangular co-ordinate system x, y, z; x, y in the middle plane of the core, z thickness direction (positive upwards).

By virtue of Hook's law for isotropic elastic materials, the strain energy per unit area of both faces is represented as [140]

$$\bar{V}_o^f = \frac{Et}{1-\nu^2}\left[\epsilon_x^{m^2} + \frac{1}{4}\left(\frac{\partial r}{\partial x}\right)^2 + \epsilon_y^{m^2} + \frac{1}{4}\left(\frac{\partial s}{\partial y}\right)^2 + 2\nu\left(\epsilon_x^m \epsilon_y^m + \frac{1}{4}\cdot\frac{\partial r}{\partial x}\cdot\frac{\partial s}{\partial y}\right) + \frac{1-\nu}{2}\left\{\gamma_{xy}^{m^2} + \frac{1}{4}\left(\frac{\partial r}{\partial y}\right)^2 + \frac{1}{4}\left(\frac{\partial s}{\partial x}\right)^2 + \frac{1}{2}\frac{\partial r}{\partial y}\frac{\partial s}{\partial x}\right\}\right] \quad \ldots.(28)$$

---

* Published in the A I A A Journal, U.S.A., Vol.30, No.3, 1992.

where t = thickness of the faces

ν = Poisson ratio

$r = u^u - u^l$; $S = v^u - v^l$

$\epsilon_x^m = \frac{1}{2}(\epsilon_x^u + \epsilon_x^l)$ etc., as given in [140]

If we rewrite Eq.(28) by introducing two invariants of the averaged strains [140]

$$I_1^m = \epsilon_x^m + \epsilon_y^m \quad ; \quad I_2^m = \epsilon_x^m \epsilon_y^m - \frac{1}{4}\gamma_{xy}^{m^2} \qquad \ldots.(28.1)$$

we obtain

$$\overline{V}_o^f = \frac{Et}{1-\nu^2}\left[I_1^{m^2} - 2(1-\nu) I_2^m + \frac{1}{4}\left(\frac{\partial r}{\partial x}\right)^2 + \frac{\nu}{2}\frac{\partial r}{\partial x}\frac{\partial s}{\partial y} + \frac{1-\nu}{8}\left(\frac{\partial r}{\partial y} + \frac{\partial s}{\partial x}\right)^2 \right] \qquad \ldots.(29)$$

The strain energy per unit area of the orthotropic core due to shear is [67]

$$\overline{V}_o^c = \frac{h}{2}\left[\left(-\frac{r}{h} + \frac{\partial w}{\partial x}\right)^2 G_{xz} + \left(-\frac{s}{h} + \frac{\partial w}{\partial y}\right)^2 G_{yz} \right] \qquad \ldots.(30)$$

Using the modified strain energy expression given in Eq. (11) of Chapter-I, Eq.(29) can be re-written as

$$\overline{V}_o^f = \frac{Et}{1-\nu^2}\left[I_1^{lm^2} + \frac{\lambda}{4}\left\{\left(\frac{\partial w}{\partial x}\right)^2 + \left(\frac{\partial w}{\partial y}\right)^2\right\}^2 + \frac{1}{4}\left(\frac{\partial r}{\partial x}\right)^2 + \frac{1}{4}\left(\frac{\partial s}{\partial y}\right)^2 + \frac{\nu}{2}\frac{\partial r}{\partial x}\frac{\partial s}{\partial y} + \frac{1-\nu}{8}\left(\frac{\partial r}{\partial y} + \frac{\partial s}{\partial x}\right)^2 \right] \qquad \ldots.(30.1)$$

where I_1^{lm} is given by Eq.(12) of Chapter-I and λ is a constant given in [162]. Addition of Eq.(30) with Eq.(30.1) gives the total potential energy

$$\overline{V}_o = \overline{V}_o^f + \overline{V}_o^c \qquad \ldots.(31)$$

Executing the variational calculus so as to minimize the total potential energy in (31) of the present elastic system of the sandwich

plates, we arrive at the following sets of differential equations :

$$I_1^{im} = \frac{\partial}{\partial x}\left(u^u + u^l\right) + \nu \frac{\partial}{\partial y}\left(v^u + v^l\right) + \frac{1}{2}\left(\frac{\partial w}{\partial x}\right)^2 + \frac{\nu}{2}\left(\frac{\partial w}{\partial y}\right)^2$$

= Constant

$$\frac{Et}{2(1-\nu^2)}\left(\frac{\partial^2 r}{\partial x^2} + \nu \frac{\partial^2 s}{\partial x \partial y}\right) + \frac{Et}{4(1+\nu)}\left(\frac{\partial^2 r}{\partial y^2} + \frac{\partial^2 s}{\partial x \partial y}\right) \quad \ldots\ (32)$$

$$+ \left(\frac{\partial w}{\partial x} - \frac{r}{h}\right) G_{xz} = 0 \quad \ldots\ (33)$$

$$\frac{Et}{2(1-\nu^2)}\left(\frac{\partial^2 s}{\partial y^2} + \nu \frac{\partial^2 r}{\partial x \partial y}\right) + \frac{Et}{4(1+\nu)}\left(\frac{\partial^2 s}{\partial y^2} + \frac{\partial^2 r}{\partial x \partial y}\right) \quad \ldots\ (34)$$

$$+ \left(\frac{\partial w}{\partial y} - \frac{s}{h}\right) G_{yz} = 0$$

$$\frac{2Et I_1^{im}}{1-\nu^2}\left(\frac{\partial^2 w}{\partial x^2} + \nu \frac{\partial^2 w}{\partial y^2}\right) + \frac{Et\lambda}{1-\nu^2}\left[\left\{\left(\frac{\partial w}{\partial x}\right)^2 + \left(\frac{\partial w}{\partial y}\right)^2\right\} \nabla^2 w + 2\left(\frac{\partial w}{\partial x}\right)^2 \frac{\partial^2 w}{\partial x^2} + 2\left(\frac{\partial w}{\partial y}\right)^2 \frac{\partial^2 w}{\partial y^2}\right.$$

$$\left. + 4 \frac{\partial^2 w}{\partial x \partial y} \frac{\partial w}{\partial x} \frac{\partial w}{\partial y}\right] + h\left(G_{xz} \frac{\partial^2 w}{\partial x^2} + G_{yz} \frac{\partial^2 w}{\partial y^2}\right) - \left(G_{xz} \frac{\partial r}{\partial x} + G_{yz} \frac{\partial s}{\partial y}\right) + q = 0 \quad \ldots\ (35)$$

where $\nabla^2 = \frac{\partial^2}{\partial x^2} + \frac{\partial^2}{\partial y^2}$

For movable edge $I_1^{im} = 0$

EXAMPLE OF ANALYSIS

NON LINEAR STATIC BEHAVIOURS OF SANDWICH PLATES

We consider the bending of a simply supported rectangular sandwich plate (a x b) with constraints in-plane displacements at the boundaries. The boundary conditions are expressed as follows :

at $x = 0$ and a; $W = 0$, $M_x = 0$, $U^u + U^l = 0$

$V^u + V^l = 0$, $S = 0$

at $y = 0$ and b; $W = 0$, $M_y = 0$, $U^u + U^l = 0$

$V^u + V^l = 0$, $r = 0$

where M_x and M_y denote bending moments.

For simply supported rectangular plate, we assume

$$W = W_o \text{ Sin } \frac{\pi x}{a} \text{ Sin } \frac{\pi y}{b} \qquad \ldots.(36.1)$$

$$r = \bar{r} \text{ Cos } \frac{\pi x}{a} \text{ Sin } \frac{\pi y}{b} \qquad \ldots.(36.2)$$

$$S = \bar{S} \text{ Sin } \frac{\pi x}{a} \text{ Cos } \frac{\pi y}{b} \qquad \ldots.(36.3)$$

Putting (36.1) in Eq.(32) I_1^{lm} is evaluated through integration over the plate as

$$I_1^{lm} = \frac{W_o^2 \pi^2}{8}\left(\frac{1}{a^2} + \frac{\nu}{b^2}\right) \qquad \ldots.(37)$$

The in-plane displacements U^u, U^l, V^u, V^l of the upper and lower faces have been eliminated through integration by choosing suitable expressions for them compatible with their boundary conditions. This is because the normal displacement 'W' is our primary interest.

Putting (36.1), (36.2), (36.3) in Eq.(35), remembering the values of $\bar{r}$ and $\bar{S}$ and the value of I_1^{lm} obtained from Eq.(33), (34), and (37), we arrive at the following cubic equation determining the central deflection W_o after applying Galerkin's procedure

$$\frac{4\pi^4 Et}{ab(1-\nu^2)}\left[\frac{(b^2+\nu a^2)^2}{16 a^3 b^3} + \lambda\left\{\frac{1}{32ab} + \frac{9}{64}\left(\frac{b}{a^3} + \frac{a}{b^3}\right)\right\}\right] W_o^3$$
$$+ \frac{\pi^2}{ab}\left[h\left(G_{xz}\frac{b}{a} + G_{yz}\frac{a}{b}\right) + \frac{bK_3}{K_2}\cdot G_{xz} - \frac{K_1 a}{K_2 b}\cdot G_{yz}\right] W_o = q_o \qquad \ldots.(38)$$

where

$$K_1 = \frac{Et\pi^2(3-\nu)G_{xz}}{4a^2(1-\nu^2)} - \left\{\frac{Et\pi^2}{4(1-\nu^2)}\left(\frac{2}{a^2} + \frac{1-\nu}{b^2}\right) + \frac{G_{xz}}{h}\right\} G_{yz}$$

$$K_2 = \frac{E^2 t^2 \pi^4}{16 a^2 b^2 (1-\nu)^2} - \left\{ \frac{Et\pi^2}{4(1-\nu^2)} \left(\frac{2}{a^2} + \frac{1-\nu}{b^2} \right) + \frac{G_{xz}}{h} \right\} \left\{ \frac{Et\pi^2}{4(1-\nu^2)} \left(\frac{2}{b^2} + \frac{1-\nu}{a^2} \right) + \frac{G_{yz}}{h} \right\}$$

$$K_3 = \left\{ \frac{Et\pi^2}{4(1-\nu^2)} \left(\frac{2}{b^2} + \frac{1-\nu}{a^2} \right) + \frac{G_{yz}}{h} \right\} \cdot \frac{G_{xz}}{a} - \frac{Et\pi^2}{4ab^2(1-\nu)} \cdot G_{yz}$$

and the load 'q' considered being sinusodial given by $q = q_o \sin \frac{\pi x}{a} \sin \frac{\pi y}{b}$

Numerical results have been obtained for a rectangular sandwich plate of orthotropic core with the following data [122; 140].

$a = 10$ in, $t = 0.025$ in, $h = 0.6746$ in

$E = 10.45 \times 10^6$ psi ; $\nu = 0.3$, $\lambda = .09$ [162]

$G_{xz} = 10^4$ psi ; $G_{yz} = 10^3$ psi.

Table 5 shows the maximum deflection parameter (W_o/h) of a simply supported square sandwich plate for different load functions.

Table - 5.

b/a	W_o/h Immovable Edge		W_o/h Movable Edge		$\frac{q_o a^4}{Eh^4}$
	Present Study	Obtained from Classical Equation given in Appendix	Present Study	Obtained from Classical Equation given in Appendix.	
1	1.184	1.08	1.81	1.94	5
1	1.548	1.407	2.46	2.703	10
1	1.81	1.66	2.92	3.21	15

OBSERVATIONS AND CONCLUSIONS

To test the accuracy of the results obtained in the present study the displacement formulations of the Classical Equations for square sandwich plates have been solved indepenedly and given in the Appendix. It is observed that the results of the present study have been obtained with ease and accuracy while the solutions given in the Appendix have been obtained after solving complicated coupled partial differential equations. This involves obviously complexicity and much computational labour. Thus the differential equations proposed in the present study are simple because of its decoupled form and seem to predict the non-linear behaviours of sandwich plates with orthotropic core with much ease and accuracy.

APPENDIX

Alwan [67] proposed differential equations for large deflections of sandwich plates with orthotropic core in terms of Airy stress function. Now the displacement formulations of his proposed equations take the following forms:

$$\frac{\partial^2 u}{\partial x^2} + \frac{(1-\nu)}{2}\frac{\partial^2 u}{\partial y^2} + \frac{(1+\nu)}{2}\frac{\partial^2 v}{\partial x \partial y} = -\frac{\partial w}{\partial x}\cdot\frac{\partial^2 w}{\partial x^2} \qquad \ldots.(39.1)$$

$$\frac{\partial^2 v}{\partial y^2} + \frac{(1-\nu)}{2}\frac{\partial^2 v}{\partial x^2} + \frac{(1+\nu)}{2}\frac{\partial^2 u}{\partial x \partial y} = -\frac{\partial w}{\partial y}\cdot\frac{\partial^2 w}{\partial y^2} \qquad \ldots.(39.2)$$

$$\left(1-D_y\frac{\partial^2}{\partial x^2}-D_x\frac{\partial^2}{\partial y^2}\right)\Delta\Delta W=\frac{1}{D}\left[1-\left(D_y+\frac{2D_x}{1-\nu}\right)\frac{\partial^2}{\partial x^2}+\frac{2D_xD_y}{1-\nu}\Delta\Delta\right.$$
$$\left.-\left(D_x+\frac{2D_y}{1-\nu}\right)\frac{\partial^2}{\partial y^2}\right]\left(q+\frac{\partial^2F}{\partial y^2}\frac{\partial^2W}{\partial x^2}\right.$$
$$\left.+\frac{\partial^2F}{\partial x^2}\frac{\partial^2W}{\partial y^2}-2\frac{\partial^2F}{\partial x\partial y}\cdot\frac{\partial^2W}{\partial x\partial y}\right)$$

....(39.3)

where

$$\frac{\partial^2F}{\partial y^2}=\frac{2Et}{1-\nu^2}\left[\frac{\partial u}{\partial x}+\frac{1}{2}\left(\frac{\partial W}{\partial x}\right)^2+\nu\left\{\frac{\partial v}{\partial y}+\frac{1}{2}\left(\frac{\partial W}{\partial y}\right)^2\right\}\right] \quad ....(39.4)$$

$$\frac{\partial^2F}{\partial x^2}=\frac{2Et}{1-\nu^2}\left[\frac{\partial v}{\partial y}+\frac{1}{2}\left(\frac{\partial W}{\partial y}\right)^2+\nu\left\{\frac{\partial u}{\partial x}+\frac{1}{2}\left(\frac{\partial W}{\partial x}\right)^2\right\}\right] \quad ....(39.5)$$

$$\frac{\partial^2F}{\partial x\partial y}=-\frac{Et}{1+\nu}\left[\frac{\partial u}{\partial y}+\frac{\partial v}{\partial x}+\frac{\partial W}{\partial x}\frac{\partial W}{\partial y}\right] \quad ....(39.6)$$

F being the Airy's stress function.

Here U, V, W are the displacement components along x, y, z directions respectively and

$$D_x=\frac{(1-\nu)D}{2h\,G_{xz}}\;;\quad D_y=\frac{(1-\nu)D}{2h\,G_{yz}}\;;\quad D=\frac{E\,t\,(h+t)^2}{2(1-\nu^2)}$$

For homogeneous plates $D_x = D_y = 0$

Let us now analyse the case of a simply supported square plate of side 'a'. For this purpose we solve first the equations for 'U' and 'V'. Let $W = W_o \sin\frac{\pi x}{a}\sin\frac{\pi y}{a}$; which clearly satisfies the simply supported edge conditions. Putting the value of W in Eq.(39.1) and (39.2) the solutions of 'U' and 'V' can be obtained in the following forms:

$$U = Ax + C_1\sin\frac{2\pi x}{a} + C_2\sin\frac{2\pi x}{a}\cos\frac{2\pi y}{a} \quad .... (40.1)$$

$$V = By + C_3\cos\frac{2\pi x}{a}\sin\frac{2\pi y}{a} + C_4\sin\frac{2\pi y}{a} \quad .... (40.2)$$

where 'A' and 'B' are determined from the boundary conditions

$$\int_0^a \left\{ \frac{\partial^2 F}{\partial y^2}\Big|_{x=a} \right\} dy = 0 \qquad \ldots.(41.1)$$

$$\int_0^a \left\{ \frac{\partial^2 F}{\partial x^2}\Big|_{y=a} \right\} dx = 0 \qquad \ldots.(41.2)$$

For movable edges (41.1) and (41.2) yield

$$A = B = - \frac{W_o^2 \pi^2}{8 a^2}$$

For immovable edge conditions $A = B = 0$

Here C_1, C_2, C_3 and C_4 are given by

$$C_1 = C_4 = - \frac{W_o^2 \pi (1-\nu)}{16 a}$$

$$C_2 = C_3 = \frac{W_o^2 \pi}{16 a}$$

Putting $W = W_o \operatorname{Sin} \frac{\pi x}{a} \operatorname{Sin} \frac{\pi y}{a}$, values of U and V obtained from (40.1) and (40.2) and using (39.4), (39.5) and (39.6), we finally obtain the following two cubic equations after applying Galerkin's procedure.

$$\frac{(3-2\nu) E h^4 \pi^4}{16 a^6} \left[\frac{1+\nu}{(h+t)^2} + \frac{E t \pi^2}{2 a^2 h (1-\nu^2)} \left\{ \frac{(1+\nu)(3-\nu)}{2} \left(\frac{1}{G_{xz}} + \frac{1}{G_{yz}} \right) \right.\right.$$
$$\left.\left. \mp \frac{(1+2\nu) E t \pi^2 (h+t)^2}{(3-2\nu) a^2 h G_{xz} G_{yz}} \right\} \right] W_o^3 + \frac{E h^4 \pi^4}{a^6} \left[1 + \frac{E t \pi^2 (h+t)^2}{4 a^2 h (1+\nu)} \left(\frac{1}{G_{xz}} + \frac{1}{G_{yz}} \right) \right] W_o$$
$$= \frac{h^2 q_o}{2 a^2} \left[\frac{h^2 (1-\nu^2)}{t (h+t)^2} + \frac{E h \pi^2 (3-\nu)}{4 a^2} \left(\frac{1}{G_{xz}} + \frac{1}{G_{yz}} \right) + \frac{E^2 \pi^4 t (h+t)^2 (1-\nu)}{2 a^4 (1-\nu^2) G_{xz} G_{yz}} \right]$$

$\ldots.(42.1)$

For movable edges.

and

$$\frac{(7-2\nu)Eh^4\pi^4}{16a^6}\left[\frac{1+\nu}{(h+t)^2}+\frac{Et\pi^2}{2a^2h(1-\nu^2)}\left\{\frac{(1+\nu)(3-\nu)}{2}\left(\frac{1}{G_{xz}}+\frac{1}{G_{yz}}\right)\right.\right.$$

$$\left.\left.+\frac{(3-2\nu)Et\pi^2(h+t)^2}{(7-2\nu)a^2hG_{xz}G_{yz}}\right\}\right]W_0^3+\frac{Eh^4\pi^4}{a^6}\left[1+\frac{Et\pi^2(h+t)^2}{4a^2h(1+\nu)}\left(\frac{1}{G_{xz}}+\frac{1}{G_{yz}}\right)\right]W_0$$

$$=\frac{h^2q_0}{2a^2}\left[\frac{h^2(1-\nu^2)}{t(h+t)^2}+\frac{Eh\pi^2(3-\nu)}{4a^2}\left(\frac{1}{G_{xz}}+\frac{1}{G_{yz}}\right)\right.$$

$$\left.+\frac{E^2\pi^4t(h+t)^2(1-\nu)}{2a^4(1-\nu^2)G_{xz}G_{yz}}\right]$$

....(42.2)

For immovable edges.

Equations (42.1) and (42.2) are now ready for numerical computations.

LARGE DEFLECTIONS OF SANDWICH PLATES WITH ORTHOTROPIC CORE AND FACES — A NEW APPROACH*

P A P E R - II.

ABSTRACT

This paper presents a simplified approach to study the non-linear behaviours of sandwich plates with orthotropic core and faces.

For a simply supported rectangular plate prevented from in-plane motions of the contour, explicit solution is obtained by means of Galerkin's procedure. Numerical results obtained from the present study are given in tabular forms and compared with other known results.

BASIC FORMULAE

Following Nowinski [122] we take a sandwich plate as given in the Figure - 1.

The sandwich plate under analysis is of a standard type, which means that it is composed of two thin faces of high mechanical properties between which a relatively thicker core of low strength material is sandwiched. It is assumed that the thickness of the core 'h' may be measured from the middle - planes of the faces.

In a customery fashion the faces are supposed to carry in-plane normal and shear stresses σ_x , σ_y , and τ uniformly distributed across the thickness. The softer core is supposed to transfer transverse shear stresses τ_x and τ_y only, so that by equilibrium equations the latter do not vary across the thickness of the core. It is assumed also that the

---

* Accepted for publication in The European Journal of Mechanical Engineering, Belgium.

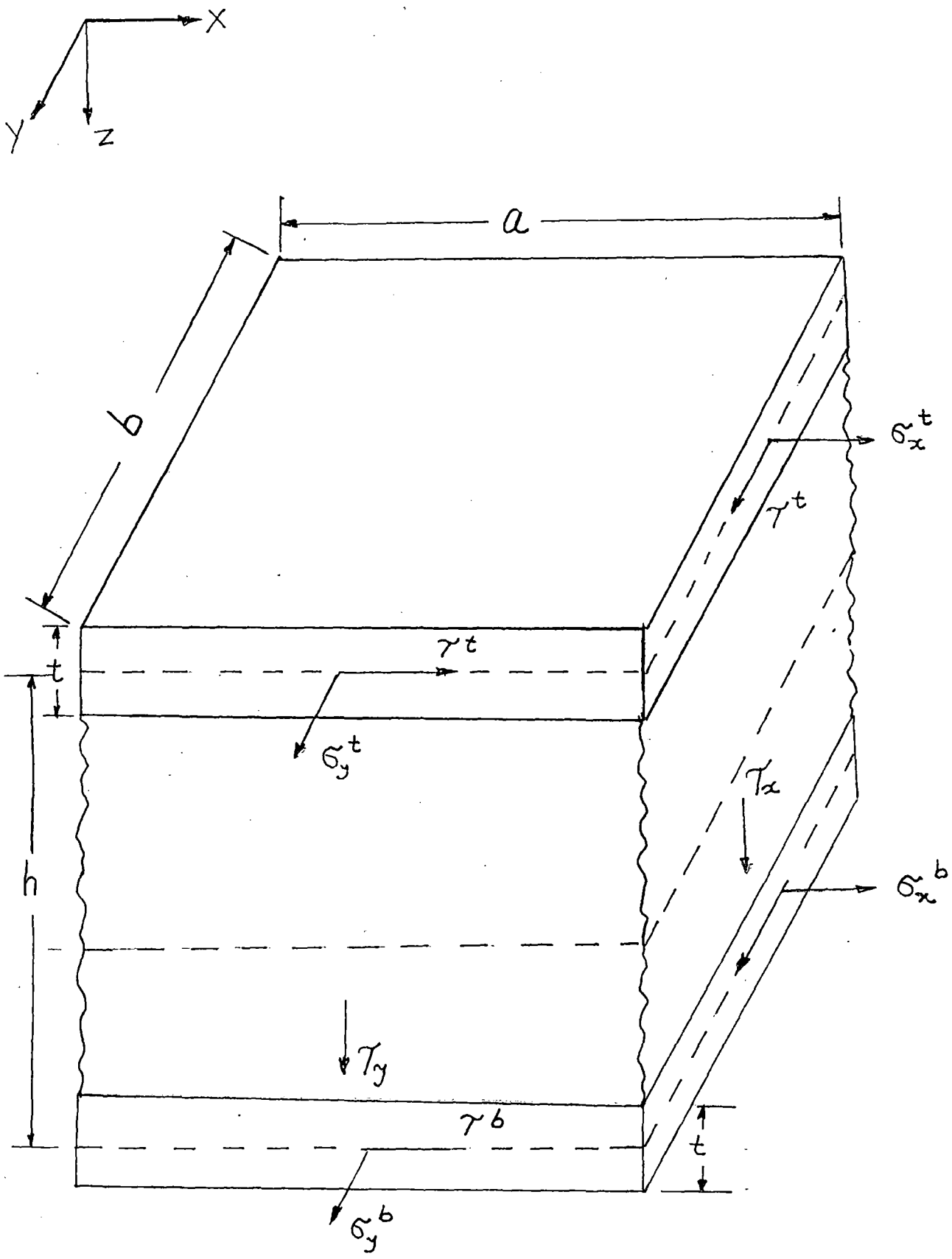

FIG-I. SANDWICH PLATE

material of both the faces and the core is orthotropic with the principal elastic directions parallel to the X - and Y - axes of a cartesian co-ordinate system X, Y, Z. The elastic characteristics of the core and of the faces are, generally speaking, different.

If the core is considered vertically incompressible, one function $W = W(x, y)$ describes the deflections of the entire sandwich plate. On the other hand, the displacement 'U' and 'V' in the X - and Y - direction respectively may be different for the upper and the lower face as well as for the core. Superscripts t (top) and b (bottom) are introduced to discriminate between the quantities associated with the upper and lower faces.

We first list the familiar stress-strain relations for the orthotropic material of the faces [122]

$$\sigma_x^{t,b} = \frac{E_1}{1-\nu_1\nu_2}\left(\epsilon_x^{t,b} + \nu_2\,\epsilon_y^{t,b}\right) \;;\quad \tau^{t,b} = G_{12}\,\gamma^{t,b}$$

$$\sigma_y^{t,b} = \frac{E_1}{1-\nu_1\nu_2}\left(\epsilon_y^{t,b} + \nu_1\,\epsilon_x^{t,b}\right) \qquad \ldots\ (43.1)$$

in which the strain components are connected with the displacement components by the non-linear equations [122]

$$\epsilon_x^{t,b} = \frac{\partial u}{\partial x}^{t,b} + \frac{1}{2}\left(\frac{\partial w}{\partial x}\right)^2 \;;\quad \epsilon_y^{t,b} = \frac{\partial v}{\partial y}^{t,b} + \frac{1}{2}\left(\frac{\partial w}{\partial y}\right)^2$$

$$\gamma^{t,b} = \frac{\partial u}{\partial y}^{t,b} + \frac{\partial v}{\partial x}^{t,b} + \frac{\partial w}{\partial x}\frac{\partial w}{\partial y} \qquad \ldots\ (43.2)$$

The bending and shearing moments experienced by the plates are of course [122]

$$M_x = \left(\sigma_x^{b} - \sigma_x^{t}\right)\frac{th}{2} \;;\quad M_y = \left(\sigma_y^{b} - \sigma_x^{t}\right)\frac{th}{2} \;;\quad M_{xy} = \left(\tau^{b} - \tau^{t}\right)\frac{th}{2} \qquad \ldots\ (43.3)$$

Following Kamiya [140] the above relations can be put in the following forms :

$$\epsilon_x^u = \frac{\partial u^u}{\partial x} + \frac{1}{2}\left(\frac{\partial w}{\partial x}\right)^2 \; ; \quad \epsilon_y^u = \frac{\partial v^u}{\partial y} + \frac{1}{2}\left(\frac{\partial w}{\partial y}\right)^2$$

$$\gamma_{xy}^u = \frac{\partial u^u}{\partial y} + \frac{\partial v^u}{\partial x} + \frac{\partial w}{\partial x}\,\frac{\partial w}{\partial y}$$

$$\epsilon_x^l = \frac{\partial u^l}{\partial x} + \frac{1}{2}\left(\frac{\partial w}{\partial x}\right)^2 \; ; \quad \epsilon_y^l = \frac{\partial v^l}{\partial y} + \frac{1}{2}\left(\frac{\partial w}{\partial y}\right)^2$$

$$\gamma_{xy}^l = \frac{\partial u^l}{\partial y} + \frac{\partial v^l}{\partial x} + \frac{\partial w}{\partial x}\,\frac{\partial w}{\partial y}$$

The averaged values of both faces strain components are given by

$$\epsilon_x^m = \frac{1}{2}\left(\epsilon_x^u + \epsilon_x^l\right) \; ; \quad \epsilon_y^m = \frac{1}{2}\left(\epsilon_y^u + \epsilon_y^l\right) \; ; \quad \gamma_{xy}^m = \frac{1}{2}\left(\gamma_{xy}^u + \gamma_{xy}^l\right) \qquad \ldots\ (43.4)$$

where $(\,)^u$ and $(\,)^l$ denote upper and lower face variable respectively, instead of t, b in (43.1).

Strain energy per unit area of the faces due to stretching only is given by [122]

$$V_1 = t\left[\frac{E_1}{1-\nu_1\nu_2}\left\{\epsilon_x^{m^2} + \nu_2\,\epsilon_x^m\,\epsilon_y^m\right\} + \frac{E_2}{1-\nu_1\nu_2}\left\{\epsilon_y^{m^2} + \nu_1\,\epsilon_x^m\,\epsilon_y^m\right\} + G_{12}\,\gamma_{xy}^{m^2}\right]$$

$$= \frac{E_1 t}{1-\nu_1\nu_2}\left[\epsilon_x^{m^2} + \nu_2\,\epsilon_x^m\,\epsilon_y^m + k^2\nu_1\,\epsilon_x^m\,\epsilon_y^m + \frac{2G_{12}\,\gamma_{xy}^{m^2}}{E_1(1-\nu_1\nu_2)} + k^2\,\epsilon_y^{m^2}\right]$$

$$= \frac{E_1 t}{1-\nu_1\nu_2}\left[\left(\epsilon_x^m + \nu_2\,\epsilon_y^m\right)^2 + \epsilon_y^{m^2}\left(k^2 - \nu_2^2\right) + \epsilon_x^m\,\epsilon_y^m\left(k_1^2\nu_1 + \nu_2 - 2k\right) + k_1\,\gamma_{xy}^{m^2}\right]$$

Following Banerjee [165] the above strain energy can be modified in the following form

$$V_1 = \frac{E_1 t}{1-\nu_1\nu_2}\left[\left(\epsilon_x^m + \nu_2\,\epsilon_y^m\right)^2 + \frac{\lambda}{4}\left\{\left(\frac{\partial w}{\partial x}\right)^2 + k^2\left(\frac{\partial w}{\partial y}\right)^2\right\}^2\right]$$

$$= \frac{E_1 t}{1-\nu_1\nu_2}\left[I_m^2 + \frac{\lambda}{4}\left\{\left(\frac{\partial w}{\partial x}\right)^2 + k^2\left(\frac{\partial w}{\partial y}\right)^2\right\}^2\right] \qquad \ldots\ (44)$$

where

$$k^2 = \frac{E_2}{E_1} \qquad \ldots.(45.1)$$

$$K_1 = \frac{2\,G_{12}}{E_1\,(1-\nu_1\,\nu_2)} \qquad \ldots.(45.2)$$

$$I_m = \epsilon_x^m + \nu_2\,\epsilon_y^m \qquad \ldots.(45.3)$$

$$\lambda = \frac{\nu_2^2\,(k^2-\nu_2^2)}{k^4} \quad [165] \qquad \ldots.(45.4)$$

Strain energy per unit area of the faces due to bending [122] is

$$V_2 = \frac{1}{th^2}\left[\frac{M_x^2}{E_1} + \frac{M_y^2}{E_2} - M_x M_y\left(\frac{\nu_1}{E_1} + \frac{\nu_2}{E_2}\right) + \frac{M_{xy}^2}{G_{12}}\right]$$

$$= \frac{t}{4(1-\nu_1\nu_2)^2}\left[E_1\left\{\left(\frac{\partial r}{\partial x}\right)^2 + \nu_2^2\left(\frac{\partial s}{\partial y}\right)^2 + 2\,\nu_2\,\frac{\partial r}{\partial x}\,\frac{\partial s}{\partial y}\right\} + E_2\left\{\left(\frac{\partial s}{\partial y}\right)^2 + \nu_1^2\left(\frac{\partial r}{\partial x}\right)^2\right.\right.$$

$$\left.+ 2\,\nu_1\,\frac{\partial r}{\partial x}\,\frac{\partial s}{\partial y}\right\} - (E_2\nu_1 + E_1\nu_2)\left\{(1+\nu_1\nu_2)\,\frac{\partial r}{\partial x}\,\frac{\partial s}{\partial y} + \nu_1\left(\frac{\partial r}{\partial x}\right)^2 + \nu_2\left(\frac{\partial s}{\partial y}\right)^2\right\}$$

$$\left.+ G_{12}\,(1-\nu_1\nu_2)^2\left\{\left(\frac{\partial r}{\partial x}\right)^2 + \left(\frac{\partial s}{\partial y}\right)^2 + 2\,\frac{\partial r}{\partial x}\,\frac{\partial s}{\partial y}\right]\right. \qquad \ldots.(46)$$

where the bending moments are given by

$$M_x = -\frac{D_1}{h}\left[\frac{\partial r}{\partial x} + \nu_2\,\frac{\partial s}{\partial y}\right]$$

$$M_y = -\frac{D_2}{h}\left[\frac{\partial s}{\partial y} + \nu_1\,\frac{\partial r}{\partial y}\right]$$

$$M_{xy} = -\frac{D_{12}}{h}\left[\frac{\partial r}{\partial y} + \frac{\partial s}{\partial x}\right]$$

and $r = u^u - u^l$; $s = v^u - v^l$

$$D_1 = \frac{E_1\,t\,h^2}{2(1-\nu_1\,\nu_2)}; \quad D_2 = \frac{E_2\,t\,h^2}{2(1-\nu_1\nu_2)}; \quad D_{12} = \frac{G_{12}\,t\,h^2}{2}$$

D_1, D_2, D_{12} are the flexural and torrisional rigidities of the plate, E_1 and E_2 are Young's moduli, ν_1 and ν_2 are Poisson's ratio along X and Y axes respectively and G_{12} is the shear modulus [122].

Strain energy per unit area of the orthotropic core due to shear [67] is

$$V_3 = \left[\frac{G_{13} h}{2} \left(\frac{\partial W}{\partial x} - \frac{r}{h} \right)^2 + \frac{G_{23} h}{2} \left(\frac{\partial W}{\partial y} - \frac{s}{h} \right)^2 \right] \quad \ldots\ (47)$$

where G_{13} and G_{23} are the shear moduli of the core.

Addition of Eq.(44), (46) and (47) gives the total potential energy 'V' per unit area of the orthotropic sandwich plate,

$$V = V_1 + V_2 + V_3 \quad \ldots\ (48)$$

Executing the variational calculus so as to minimize the total potential energy in (48) of the present elastic system of the sandwich plate, we arrive at the following sets of differential equations :

$$\frac{\partial I_m}{\partial x} = 0 \quad \ldots\ (49)$$

$$\frac{\partial I_m}{\partial y} = 0 \quad \ldots\ (50)$$

$$G_{13} \left(\frac{\partial W}{\partial x} - \frac{r}{h} \right) + \frac{G_{12} t}{2} \left(\frac{\partial^2 r}{\partial y^2} + \frac{\partial^2 s}{\partial x \partial y} \right) + \frac{t}{4(1-\nu_1\nu_2)} \left[2 E_1 \frac{\partial^2 r}{\partial x^2} + \left(E_2 \nu_1 + E_1 \nu_2 \right) \frac{\partial^2 s}{\partial x \partial y} \right] = 0 \quad \ldots\ (51)$$

$$G_{23} \left(\frac{\partial W}{\partial y} - \frac{s}{h} \right) + \frac{G_{12} t}{2} \left(\frac{\partial^2 s}{\partial x^2} + \frac{\partial^2 r}{\partial x \partial y} \right) + \frac{t}{4(1-\nu_1\nu_2)} \left[2 E_2 \frac{\partial^2 s}{\partial y^2} + \left(E_1 \nu_2 + E_2 \nu_1 \right) \frac{\partial^2 r}{\partial x \partial y} \right] = 0 \quad \ldots\ (52)$$

$$\frac{E_1 t}{1-\nu_1\nu_2}\Big[2 I_m\Big(\frac{\partial^2 W}{\partial x^2}+\nu_2\frac{\partial^2 W}{\partial y^2}\Big)+\lambda\Big\{\Big(\frac{\partial W}{\partial x}\Big)^2+k^2\Big(\frac{\partial W}{\partial y}\Big)^2\Big\}\Big(\frac{\partial^2 W}{\partial x^2}+k^2\frac{\partial^2 W}{\partial y^2}\Big)$$
$$+2\lambda\Big\{\Big(\frac{\partial W}{\partial x}\Big)^2\frac{\partial^2 W}{\partial x^2}+k^2\Big(\frac{\partial W}{\partial y}\Big)^2\frac{\partial^2 W}{\partial y^2}+(k^2+1)\frac{\partial W}{\partial x}\frac{\partial W}{\partial y}\frac{\partial^2 W}{\partial x\partial y}\Big\}\Big]$$
$$+h\Big(G_{13}\frac{\partial^2 W}{\partial x^2}+G_{23}\frac{\partial^2 W}{\partial y^2}\Big)-\Big(G_{13}\frac{\partial r}{\partial x}+G_{23}\frac{\partial s}{\partial y}\Big)+q=0 \qquad \ldots.(53.1)$$

where q is a uniform load.

Clearly Eq.(49) and (50) yield

$$I_m = \epsilon_x^m + \nu_2\,\epsilon_y^m$$
$$= \frac{\partial}{\partial x}(u^u+u^l)+\nu_2\frac{\partial}{\partial y}(v^u+v^l)+\frac{1}{2}\Big(\frac{\partial W}{\partial x}\Big)^2+\frac{\nu_2}{2}\Big(\frac{\partial W}{\partial y}\Big)^2$$
$$= \text{Constant} \qquad \ldots.(53.2)$$

For movable edge $I_m = 0$

ANALYSIS

We consider a rectangular orthotropic sandwich plate (a x b) acted upon by a uniformly distributed vertical load 'q'. It is assumed that the edges of the plate are simply supported. This gives first of all along the entire contour, W = 0

and $M_x = 0$ on $X = 0, a$; $M_y = 0$ on $Y = 0, b$

with regard to the in-plane motions it is assumed that the edges are restrained.

For a simply supported rectangular plate, let us assume 'W' in the form

$$W = W_o \operatorname{Sin}\frac{\pi x}{a}\operatorname{Sin}\frac{\pi y}{b} \qquad \ldots. (54.1)$$

Let us assume 'r' and 'S' in the form

$$r = r_o \operatorname{Cos}\frac{\pi x}{a}\operatorname{Sin}\frac{\pi y}{b} \qquad \ldots. (54.2)$$

$$S = S_o \operatorname{Sin}\frac{\pi x}{a}\operatorname{Cos}\frac{\pi y}{b} \qquad \ldots. (54.3)$$

The constant I_m is evaluated by putting (54.1) in Eq.(53.2) and integrating over the plate. Thus I_m is given by

$$I_m = \frac{W_o^2 \pi^2}{8}\left(\frac{1}{a^2} + \frac{\nu_2}{b^2}\right) \qquad \ldots\ (55)$$

The in-plane displacements U^u, U^l, V^u, V^l of the upper and lower faces have been eliminated through integration by choosing suitable expressions for them compatible with their boundary conditions. This is because the normal displacement 'W' is our primary interest.

Putting (54.1), (54.2), (54.3) in Eq.(53.1), remembering the values of r_o and S_o and the value of I_m obtained from (51), (52) and (55) respectively, we arrive at the following cubic equation determining the central deflection W_o after applying Galerkin's procedure.

$$\frac{\pi^6 t}{4b^4 h(1-\nu_1\nu_2)}\left[\frac{(b^2+\nu_2 a^2)^2}{16} + \lambda\left\{\frac{3}{64}(b^2+k^2a^2)^2 + \frac{3}{32}(b^4+k^2a^4) - \frac{(k^2+1)a^2b^2}{32}\right\}\right]\left(\frac{W_o}{h}\right)^3 + \frac{\pi^4 a^4}{16 E_1 h^2}\left[\left(\frac{G_{13}}{a^2}+\frac{G_{23}}{b^2}\right) - \frac{1}{abh(A^2-BC)} \times \left\{G_{13}\, b\left(G_{23}\frac{A}{b} - G_{13}\frac{C}{a}\right) + G_{23}\, a\left(G_{13}\frac{A}{a} - G_{23}\frac{B}{b}\right)\right\}\right]\left(\frac{W_o}{h}\right) = q^* \qquad \ldots\ (56)$$

where

$$q^* = \frac{q\, a^4}{E_1\, h^4}$$

$$A = \frac{G_{12}\, t\, \pi^2}{2\, a\, b} + \frac{\pi^2 t\,(E_1\nu_2 + E_2\nu_1)}{4ab\,(1-\nu_1\nu_2)}$$

$$B = \frac{G_{13}}{h} + \frac{\pi^2 t}{2}\left[\frac{G_{12}}{b^2} + \frac{E_1}{a^2(1-\nu_1\nu_2)}\right]$$

$$C = \frac{G_{23}}{h} + \frac{\pi^2 t}{2}\left[\frac{G_{12}}{a^2} + \frac{E_2}{b^2(1-\nu_1\nu_2)}\right]$$

Numerical results have been obtained for a square sandwich plate of orthotropic core and faces with the following datas [122, 209]

$\nu_1 = 0.25$, $\nu_2 = 0.025$, $G_{12} = 10^6$ psi, $G_{13} = 2 \times 10^5$ psi

$G_{23} = 2 \times 10^5$ psi, $t = 0.002$ in, $h = 0.202$ in, $K^2 = 0.1$

$\lambda = 0.00621$, $a = 10$ in, $E_1 = 40 \times 10^6$ psi, $E_2 = 40 \times 10^5$ psi

Table 6 shows the maximum deflection parameter (W_o/h) of a simply supported square sandwich plate for different load functions.

Table - 6.

b/a	q*	W_o/h Present Study Immovable edge	W_o/h [122] Immovable edge	W_o/h Present Study Movable edge
1	0.5	0.98	0.92	1.39
1	1.0	1.44	1.35	2.70
1	1.5	1.78	1.65	3.90

CONCLUSIONS AND OBSERVATIONS

The results of the present study have been compared only with those of Nowinski [122] who applied Classical Equations in his investigations. No other results on the present investigations are available. Nowinski's results are interesting for design engineers.

The differential equations proposed in the present study are in the uncoupled form and thus simple. As a consequence the results of the present study have been obtained with ease and accuracy. It is observed that greater deflection is obtained in the present study than that obtained in [122]. This is welcome from the practical point of view. The solution obtained from [122] involves a very lengthy calculation and much computational labour.

Thus the proposed differential equations seem to predict the non-linear behaviours of orthotropic sandwich plates with much ease and accuracy. Also from the same cubic equation the results of the movable edge conditions can be obtained by putting $I_m = 0$. This is an additional advantage.