E LABEL
LIBRARY
H BENGAL UNIVERSITY
to be returned or the

THE IMPACT OF ELECTRICITY GENERATION AND ITS ABSORPTION ON A PREDOMINANTLY AGRARIAN ECONOMY — A CASE STUDY OF IRRIGATION SYSTEMS IN COOCH BEHAR DISTRICT

Thesis Submitted to the
University of North Bengal
for the Degree of
Doctorate of Philosophy(Arts)

1993

Arindam Ray

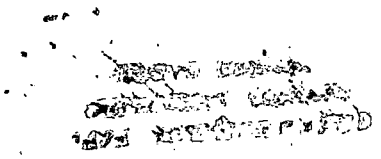

Supervisor

Jeta Sankrityayana
Reader in Economics

DEPARTMENT OF ECONOMICS
University of North Bengal
DARJEELING, WEST BENGAL.
INDIA

ST - VERT

STOCK TA... 2011

Ref.
338.16095414
R263i

STOCK TAKING - 2011

110750
2 JAN 1994

Contents

I. STATEMENT & OVERVIEW : IRRIGATION IN RURAL DEVELOPMENT

1.1	Introduction	1
1.2	Rural Transformation	2
1.3	The Problem	3
1.4	The Agrarian Question	4
1.5	Rural Development Alternatives	7
1.6	Transforming Traditional Agriculture	10
1.7	Irrigation Technology	13
1.8	Irrigation Systems	15
1.9	Irrigation Impact Studies	18
1.10	Extended Issues	20
1.11	Area Studies of Relevance	25
1.12	The Literature on Power	26

II. THE ELECTRICITY SECTOR : SPATIAL & TEMPORAL DEVELOPMENTS

2.1	Power : An Introduction	31
2.2	Organisation	32
2.3	Generation & Consumption	34
2.4	Critical Review	39
2.5	Transmission & Distribution	40
2.6	Rural Electrification	41
2.7	Grid Features	44
2.8	System & Organisation	48
2.9	The WBSEB	49
2.10	Generation & Demand	50
2.11	Regional Demand	53
2.12	Transmission & Distribution	57
2.13	Generation & Sale of Electricity in North Bengal	58
2.14	A Critical Appraisal	62

III. THE CASE-STUDY : BACKGROUND INFORMATION

Cooch Behar District

3.1	General Features	75
3.2	Population	77
3.3	Pedology & Climate	80
3.4	Land-Use Characteristics	82
3.5	Cropping	85
3.6	The Irrigation System	87
3.7	Groundwater	89
3.8	Minor Irrigation Schemes	93
3.10	Agriculture	96
3.11	Irrigation	98
3.12	Directions for Empirical Study	103

IV. THE SAMPLE STUDY : BROAD RESULTS

4.1	Introduction	105
4.2	The Field Survey	106
4.3	Computation	107
4.4	Findings	109
4.5	A Summary	114
4.6	Tentative Findings	115
4.7	Other Results	116
4.8	Conclusions	126

V. EXTENSIONS FROM THE SAMPLE-STUDY

5.1	The Labour Impact	127
5.2	Inter-Seasonal Variations	133
5.3	The Impact on Land	136
5.4	Technical Factors in Scheme Efficiency	139

VI. SUMMARY & CONCLUSIONS FROM THE STUDY

6.1	Introduction	144
6.2	Irrigation	145
6.3	Rural Development	147
6.4	Electricity	148
6.5	The National Scenario	148
6.6	The Regional Scenario	150
6.7	The State Scenario	151
6.8	Power in North Bengal	152
6.9	The Scenario in the Study-Region	153
6.10	The Case-Study	154
6.11	Major Findings	158

LIST OF TABLES

2.1. All-India and Statewise Domestic & Industrial Per Capita Consumption of Electricity (kwh) (1980-81). 32

2.2. Generation of Electricity By Source & Region in India 36

2.3. Consumption of Electricity by Sectors 37

2.4. Growth of Power Sector in the Plan Period 38

2.5. Inter-Regional Transfers of Power (1986-87) 41

2.6. All-India Figures for Rural Electrification (1977-78 to 1987-88) 42

2.7. Sub-Systemwise Installed Capacity of EREB Constituents 45

2.8. Exchange of Power Between EREB Constituents 46

2.9. Power & Energy Exchanges Between EREB Constituents : Import:Export Ratios 47

2.10. Capacity of Generators Installed (MW) in WBSEB System 50

2.11. Addition to Generating Capacity in West Bengal (excluding DVC & NTPC) 51

2.12. Demand Projections for West Bengal (excluding DVC) 51

2.13. Power stations/generation facilities locally located are at: 53

2.13. (A) Power Potential of North Bengal 56

2.14. Monthwise Generation Statement for the Year 1989-90 in kwh 59

2.15. District wise Sale of Energy (Rural-L&MV) for the year 1989-90 60

2.16. District wise Sale of Energy (Urban+Rural - L&MV) for the year 1989-90 60

2.17. Districtwise Consumers (L&MV) for the year 1989-90 61

2.18. Districtwise Connected Load (MW) in Respect of (L&MV) Consumers for the year 1989-90 61

2.19. Electricity load projections for WBSEB Command Areas in West Bengal Aggregate Projected Load over All Districts 66

2.20. Aggregate Agricultural Projected Load over All Districts 68

2.21. Cooch Behar District : Distribution of Projected Loads By Category:Pessimistic, Likely & Optimistic Scenarios 71

3.1. Blockwise Distribution of Population in Cooch Behar District (1981 Census) 78

3.2. Police Station-wise Distribution of Population in Cooch Behar District (1981 Census) 78

3.3. Decadal Variation of Population in Cooch Behar District (1901-1991) 79

3.4. Occupational Categories in the Population of Cooch Behar & West Bengal 79

3.5. Break-up of Main Workers by Activities on Cooch Behar 80

3.6. Mean-Monthly Rainfall of the District of Cooch Behar (1901-50) 81

3.7. Average Rainy days in the Cooch Behar District(1901-50) 82

3.8. Land Utilisation Statistics in Cooch Behar 82

3.9. Land-Utilisation in the District of Cooch Behar 1901-02 to 1964-65 83

3.10. Blockwise Land Utilisation Statistics in Cooch Behar District 83

3.11. Ownership Distribution of Holdings in Cooch Behar 84

3.12. Land Area & the Land-Use in North Bengal 85

3.13. Agricultural Area,Production & Productivity in some Districts of West Bengal 87

3.14. Cultivable Area & Irrigation Potential in North Bengal 88

3.15. Gross Cropped Area & Cropping Intensity in North Bengal 88

3.16. Blockwise Estimation of Annual Recharge & Potential Available for Irrigation in Cooch Behar District 91

3.17. Blockwise Estimation of Groundwater Draft in Cooch Behar District 92

3.18. Blockwise Estimation of Groundwater Balance Available for Further Development in Cooch Behar District 92

3.19. Minor Irrigation Schemes in Cooch Behar,1987-88 93

3.20. Distribution of Rural Population in Dinhata I and Tufanganj I Blocks 97

3.21. Area, Production and Yields of Principal Crops in Dinhata I and Tufanganj (I & II) Blocks 1984-85 98

3.22. Shallow Tubewells (electricity & diesel) in Dinhata I & Tunfanganj I Blocks: Distribution by Landholding Groups 100

3.23. Shallow Tubewells in Dinhata I & Tufanganj I Blocks: Distribution by Power Source 100

3.24. Community Irrigation Installations in Dinhata I & Tufanganj I Blocks 101

3.25. Area Irrigated by Season & Scheme in Dinhata I and Tufanganj I Blocks, 1987-88 102

4.1. Correlation Matrix 108

4.2. Matrix of Principal Components Table of Eigenvectors 108

4.3. PC Variances 108

4.4. Principal Component Scores : Schemewise Averages over All Impact Variables 111

4.5. Ranking Table over all Principal Components Schemewise Rankings over PC-SCORs 111

4.6. Ranking Table over all Impact Variables Schemewise Rankings over PC-SCORs Average PC-SCOR per Impact Variable 112

4.7. Inter-Seasonal Profile of the Impact of Irrigation: by Crops 117

4.8. Seasonal Net Impact 119

4.9. Comparative Features of Pre- and Post-Irrigation Profiles 119

4.10.Schemewise Annual Impact 120

4.11.The Annual Impact : Per Capita Incremental Cost & Percentage Outlays 122

4.12.Seasonwise & Schemewise Investment Pattern 123

5.1. Seasonwise Incremental Labour Utilisation 128

5.2. Seasonwise Incremental Labour Utilisation 132

5.3. Inter-Seasonal Variations in Labour Creation 134(b)

5.4. Incremental Labour Utilisation by Scheme 134(b)

5.5. Schemewise Landholding & Land Transfer Pattaren 137

5.6. Schemewise Technical Performance Characteristics for Irrigation Systems under Field Conditions 141

PREFACE

The present dissertation is intended to be my thesis for the degree of Ph.D. in Economics of North Bengal University. The concept of decentralised planning and regional development require rural development to remove growing disparities between the rural and urban economies.To this object,a bulk inflow of electricity to the rural sector may remove inequalities especially in the regions richly endowed with the hydel resources. The present work ventures to add one more modest approach to this broad mass of ideas on agriculture and rural development. What is newer is perhaps its analysis of the power sector in this context, and its use of multivariate analysis in the toolbox of micro-level survey methodology. This may increase the utilitarian content of micro-level surveys.

I acknowledge with whole-hearted and sincere gratitude, the help of my supervisor, Shri Jeta Sankrityayana, Reader in Economics, whose generous and untiring inspiration and guidance have led to these ultimate results. His sincere supervision, which made the hard work easier, and his versatility have endowed me with the zest to find a way through the huge chunks of data according to need. Any kind of formal acknowledgment would be insufficient to repay this debt. I also take the opportunity to express my gratitude to Professor M.Dasgupta who provided me with the project fellowships that supported this study, and valuable encouragement and advice.

Similar acknowledgement goes out to Dr.R.N.Bhattacharya, Prof.P.C. Sarkar, Dr.P.Chakraborty, Dr.H.K.Chakrabarti and Dr.C.K.Mukherjee of the Department of Economics for their ready assistance at the time of every need. I am obliged to Smt.S.Roy Mukherjee for her encouragement and friendly help during the period of this study, and to Smt.S.Datta (Ray), I extend my thankfulness for her assistance.

I should not ignore my obligation to the University and the Department of Economics as a whole. Cooperation and assistance at all levels and facilities extended have contributed to this work in no small measure. So also has been the response from all the agencies and offices and individuals who, with the materials for this research, gave me the benefits of their wisdom and experience.

My reverential acknowledgment with deepest respects and gratitude is to my parents for being ever tolerant and for constant inspiration and encouragement. My respects are due to my parents-in-law for their inspiration and encouragement. Finally, I am deeply grateful to my wife, Chirashree, who has been the main source of inspiration and who has always stood beside me, with cheer and encouragement. Her calm endurance, patient bearing and companionship at all possible times have finally paved the way to the completion of this strenuous task.

I am obliged to Shri Ashim Datta and Shri Monotosh Bose for their friendly help and assistance. I would be at fault if I did not extend my thanks to all my contemporaries, especially to Subrata (De Sarkar) and Atish, who have helped me immensely at the final stage of work. For friendship, for encouragement and above all for moral support my thankfulness goes out to Tapan, Subrata, Subhas, Aniruddha, Ashraf, Michael,Subhasish,Madhu,Debashis,Jayanta, Biswajit and Arghya whose help and assistance was always there whenever needed.

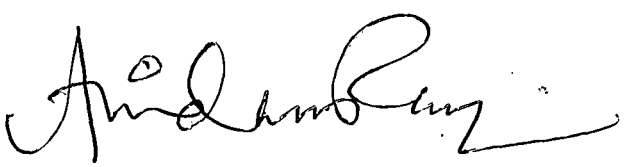

CHAPTER I

STATEMENT & OVERVIEW : IRRIGATION IN RURAL DEVELOPMENT

1.1 Introduction

The role of electricity as a technological input has long been recognised in the development debate. However recent interest in electricity has discernibly shifted from the issues of public utility economics e.g. pricing etc. to an overview of electricity in an overall energy context. In developing countries, the tasks of planning include the incorporation or modern elements into the technology used, no matter which economic activity is being considered, and electricity is contextually found to be important to both the rural economy as well as the urban-industrial one.

Electricity, as an energy input, is both a consumption good as well as a producer good. Use of energy is thus made in the household, in industry and commerce, as also in the agricultural sector. However, in developing countries, with low technology levels, the greatest potential use of electricity is in technology upgradation in industrial and agricultural production, although recognition of the latter has only come after the economics of energy-use were substantially altered by the oil crisis and the subsequent escalation in fossil-fuel prices.

A study of electricity-use in the agrarian sector, as is presently intended must involve some comparison of alternative sources of energy in irrigation technology; this is in recognition of the expansion of irrigation as being the primary technological option in the rural sector. This point of view has special relevance in a development context, especially in highly-populated land-poor countries. Since the focal impact of electricity in the rural sector will derive from augmentation of irrigation capacity, certain issues in natural resource economics must immediately be addressed.

A traditional definition of natural resources is as naturally occurring resource systems useful to human beings, either presently or under plausible technological,economic and social circumstances.In the context peculiar to the study, namely, electricity-use in the irrigation sector of a rural economy,three resource systems are encompassed: the availability of water resources, both surface and ground water; the availability of hydro-electric resources versus coal and other fuel resources which provide alternative thermal generation possibilities; and the relative scarcity of petroleum, oil and lubricants (POL) which had hitherto been the mainstays of a technology built around the internal combustion engine. Of these, surface and ground waters for irrigation use are renewable resources within the limits of precipitation and aquifer recharge,and hydel resources are renewable and clean energy resources, whereas coal and POL resources are non-renewable, with the latter being subject to the highest rate depletion.

Issues in natural resource economics pertain to existence and location of resource, a historical shift away from renewable resources to dependence on non-renewable resources, the wisdom of past patterns of resource allocation, environmental considerations in resource use and the role to be given to market policies in determining optimal allocation of resources.[1] Although the resource endowment would, by nature, be conditioned by scarcity, scarcity factors can be mitiga particularly by technological progress, by substitution of

plentiful resources for less plentiful ones, by expanded trade or discovery of new reserves and by recycling.[2] However all the factors have investment implications which escalate with time.

Earliest thinking on the resource question can be traced back to Ricardo, in his theory of differential land rents or Jevons' concern with the substitution of renewable timber resources by non-renewable coal in British industry. Although the literature and terminologies have multiplied since then, theoretical concerns remain identical. In the context of the present study they are two-fold. In the energy aspect, the study seeks to examine the justifications, if any behind continued use of expensive fossil-fuel resources in the technology-mix in place of relatively cheaper and abundant renewable ones; in an irrigation context the study relates alternative water resource systems to the cost-efficiency of their exploitation. The study is couched in terms of a regional and agrarian context which lends itself to evaluation by approximate case study.

In its design, the study first explores literature references on rural development and agrarian structures, irrigation studies in both productivity and energy efficiency aspects, questions of pricing of electricity and irrigation waters, power systems and other relevant research. The second chapter addresses spatial and temporal aspects of the power system in India, with special focus on rural electrification and the problems inherent in it. A separate section treats power data relevant to the study region. The third chapter is a comprehensive introduction to Cooch Behar, the area chosen for case study; secondary sources provide descriptive detail on the survey-blocks selected for evaluation. The fourth chapter presents findings from the empirical survey on differential aspects of the irrigation systems prevalent in the study region with special reference to systems dependent on electricity. The fifth chapter presents the subsidiary empirical findings on land and labour dynamics and on energy-use, again in the framework of alternative irrigation systems. The sixth and final chapter comprises a summary and final conclusions of the study.

The remainder of this chapter is an exploration of the literature references mentioned above and serves to place the study in context.

THE LITERATURE

1.2 Rural Transformation

In developing societies with primarily agrarian characteristics, agriculture remains the mainstay of economic activity for some time to come while transition to industrialisation is being achieved. Agriculture in such societies is of the subsistence type because of the dependence of a large population on it for their subsistence. The development process when initiated, sets two parallel moulding forces into motion. These are the transition of the merchant market-oriented urban settlement into an urban industrial one; and the transformation of subsistence-oriented traditional agriculture into a transitional market-oriented stage,with prospect of its eventual commercialisation.

Development processes engendered by planning in India have followed a similar course, and have demonstrated the fragility of the linkage between the objectives of development *per se*, and the goals of social welfare and equity. Realisation of this has been some time in coming. Initial plan emphases were on rapid industrialisation at any cost, leaving few resources to be targeted to development of the rural

community, beyond obvious social welfare measures like community health and education. Rural society and the agriculture that was its backbone was assumed to be self-sustaining, and without the need for explicit government intervention. Discrimination towards agriculture in order to fund industrial growth was accepted as a necessary evil; however the rapid transition to an industrial society was assumed to then take care of the overall goal of development, namely "to increase the economic, political and civil rights of all people across gender, ethnic groups, religious, races, regions, and countries".[3] However, experience has shown that 'transitional' problems of immiserisation and inequality tend to exacerbate because of the length of transition; compression of the two-century long path to industrial society followed in the developed countries into a mere matter of decades, such has been sought to be initiated in the newly-industrialised countries, cannot succeed without attendant distortions in economic relations and structures. It is seen that the issue of rural development in primarily agrarian economies moves beyond simplistic and broad market-oriented efficiency considerations into distributional issues with welfare connotations.

Such realisation has also attended the evolution of the planning process in India, flowing from perceptions of world development. "Rapid agricultural growth has generally been associated with successful industrialisation and sustained gains in overall output and productivity. Growth in output and productivity are usually lower where agricultural growth is low. Of sixty eight developing countries for which the World Bank has reliable data, thirty experienced agricultural growth rates of more than three percent a year during past twenty five years. All thirty had a GDP growth rate of at least 2.5 percent, and two-thirds of the countries whose agricultural sector grew fast also experienced very rapid economic growth (exceeding five percent)".[4]

1.3 The Problem

The perception of the agricultural sector in a planned economy, thus, changed from seeing it as a boundless source of resources for industrial investment, once policies designed to protect industry turned the terms of trade against agriculture and led to the growth of rural poverty. "Since development by and large [had] to depend more on the potentiality towards mobilisation of resources, their disparate resource base [seemed] to shift the emphasis of development from the mechanism for mobilisation of resources to techniques of exploitation".[5] From the period of the Fourth Plan onwards, larger plan allocations were devoted to agriculture and to rural development, with a recognition that the two are inter-related. Additional to this, a separate component of planning measures was evolved that addressed itself to poverty-alleviation.

A large number of studies have captured these aspects of rural development. Danda (1986) deserves that development has homogenisation as its explicit objective. In India "primarily due to unequal capability to absorb benefits", development is "often found to widen the gap between the rich and the poor".[6] Coupled in certain cases, with differential control over resources a tendency towards segregation of various segments of the same population can also emerge, even though the process of development may continue to contribute substantially to growth of GNP, and thus ostensibly to fulfill its objectives. But, as welfare is another primary goal of development, this can at best be termed as partial fulfilment unless

homogenisation of society takes place concurrently.[7]

Bose (1985)[8] cites estimates of number of people below the poverty line by Dandekar & Rath, Ahluwalia, and Vaidyanathan for the year 1960-61, which range from 135 million to 213.5 million. Another cited figure of the Planning Commission's estimate for 1979-80 is at 259.6 million, thus exhibiting the increasing trend of rural poverty over the planning period. Inequalities in regional distribution of rural poverty are cited from the Sixth Five Year Plan,which show high preponderances in Eastern India and in Madhya Pradesh. The author attributes this to the patterns of development initiated by the plans, identifying emerging contradictions between the elite and the deprived sections of the people, between conclaves of development versus backward regions and between development attained and its future prospects in a situation where present trends in development performances threaten the future potential for it. He then focuses on two antagonistic alternatives :

i) to take the continuation of the present developmental path as foregone, and then to ameliorate growing discontent without basically hampering current growth trends in the economy despite their leading to "further accumulation of wealth and real power in the hands of a few";[9] or

ii) to exploit the latent possibilities in the dynamics of development for transformation of the system into a new and more equitable social order where science & technology is relevant to the people.

The first approach is obviously the much debated one of 'appropriate technology' in which development is reflected as a necessary palliative to growth of inequalities instead of a primary instrument of socio-economic change, as in the latter.

The considerable development of rural areas in India since independence is seen "in terms of relatively dramatic increase in agricultural production although at a decreasing rate after the introduction of HYV phase; in extension of irrigation facility, in use of 'modern agricultural inputs' like chemical fertiliser, plant protection materials, agricultural machinery, etc.".[10] However, this is not seen to have a made a dent in the problem of rural poverty, the reasons for which are concentration of land ownership in the hands of a few and increasing landlessness otherwise, concentration of savings in the hands of the rich and inability to save and invest for agricultural production for the overwhelming majority of the poor, the growing problem of the distress-sales by the rural poor in order to meet pressing obligations and pernicious share-cropping systems that work to the detriment of agricultural performance. The solution, in the author's opinion is to look at the rural poor as "working producers who can potentially be a decisive [economic] force"[11] and to evolve a symbiotic relationship between them and technology.

1.4 The Agrarian Question

The problem relating to the meaning and scope of rural development has attracted the attention of several eminent scholars internationally. Three approaches appear to dominate perspectives. "In the first instance the agrarian question is a political question regarding the attitude of the peasantry and their role in the transformation of an extant social formation".[12] A "second layer of meaning .... has to do with class formation in agriculture or the differentiation of the peasantry",[13] in which productive relations between land owner

tenant farmers and the landless wage labours are exploited. "The third interpretation .... concerns the linkage between the agriculture and the overall development of the entire social formation, in particular the process of industrialisation",[14] where "the role of agriculture as a major source of surplus for primitive accumulation, prior to the self-sustaining accumulation of industrial capital"[15] comes into focus alongwith its importance as a 'home market' for industrial products. It is the third approach from which "much of the economics of development *a la* Arthur Lewis"[16] derives.

Bharadwaj (1986) traces the tradition of political economy originating from Quesnay & Ricardo as evolving into the Marxian approach of 'Surplus Based Theory', and another into the 'Demand-Supply equilibrium Theory' which is the 'mainstream' tradition usually described as neo-classical economic theory. Mainstream theory was primarily concerned with efficient allocation of resources initially through a 'markets and prices approach', later eclipsed by post-Keynesian development that recognised the inadequacy of market mechanism in overcoming some of the fundamental barriers to development. However inability of both varieties to accurately specify initial constraints, especially in agriculture have led to aberrations in the resulting development process. High or rising trends in GNP and industrial growth were observed to coexist with a rise in the number of people living at or below subsistence level in vast regions of agricultural backwardness.

Within theories of the mainstream genre follow diagnostic approaches to the problems of development wherein problems of unemployment/underemployment are ascribed to the existence of imperfect factor-markets, limited factor-substitutability in technology, and immobility of resources, that formed the corpus of the theory of development in the '50's comprising the work of Eckaus (1955), Kindleberger & Depres (1952), the 'Critical minimum effort' thesis of Leibenstein,the 'balanced-growth' paradigm of Hirschman and development literature associated with W.A.Lewis (1955), and Bauer & Yamey which drew its focuses from the de-colonisation experience.[17] Other variants of the latter are the work of Nurkse (1953)[18] and Rostow. Further manifestation of this stream is found in a slightly non-neoclassical setting (because of the assumption of availability of labour at constant wage rate to the organised sector) in theories of dualistic development where the 'pre-capitalist' backward agricultural sector coexists with a thoroughly competitive capitalist modern sector. Modern approaches that stem from the same tradition of neo-classical abstraction are the game-theoretic approaches whereby contractual systems between transactors/transacting classes are modeled e.g. Binswanger (1981).[19]

The Marxian analysis , on the other hand, has 'surplus' as its central notion. Production conditions in the economy are defined by the modes of production representing generation and distribution of surplus among the class of surplus producers and appropriators. In this approach, modes of production are considered to be influenced by a number of historical and social factors including class struggle i.e. stages of development, the changing capital-labour relation, effects of technical changes on distribution and on the reserve army of the unemployed and vice-versa.[20] As the "three sets of data (effectual demand, methods of productions and wages) in the scheme of prices of production are not independent of each other",[21] relative prices do not play the central role in a Marxian system for guiding efficient resource allocation. Instead the commanding force behind

accumulation is investment, with prices playing a secondary role in maintaining minimum viability rather than efficiency of production.

In development theory, it is in the analysis of agrarian change that problems of dealing with non-competitive and non-capitalist situations arise for which reason the Marxist approach has advanced in India; this is because of a differentiated peasantry, persistence of semi-feudal relations in productions and exchange, identification of the transacting position of a peasant by the class he belongs to, and the existence of alternative developmental strategies, each with divergent class consequences.

Byres(1986) is a historical/empirical analysis to the agrarian question within political economy, resting on the observation of the agrarian transition in England, Prussia, the United States, France, Japan, and South Korea and Taiwan in the wake of Japanese colonialism. Following the Kautsky-Lenin formulations which extended Marx's statement of the development of capitalism to the countryside, the author is of the view that agrarian question may be partly, and even fully, resolved without the dominance of capitalistic relations of production in the countryside. He categorises this "as a form of agrarian transition: the securing of an agrarian structure which, though not itself capitalist in its relation of production or not therefore in any useful sense, capitalist agriculture nevertheless does not impede capitalist industrialisation and does not block overall capitalist transformation"[22] and argues "that this can be shown to have happened in certain crucial historical instances of successful capitalistic development".[23] He says that a class of few wage labourers can be created, depeasantisation and proletarianisation can proceed, a home market can be formed, and appropriation of surplus therein renders capital accumulation outside of agricultural possible and in a capitalistic form. Of India, the author notes that successful capitalistic transformation is limited to the north-west and pockets elsewhere and has in any case been via a peasant route, requiring prior struggle by peasants, and successful action against landlords to the benefit of rich peasants but not of other strata in the peasantry or in the landless, and predicts persistence of non-capitalistic form in the Indian countryside for a long time to come.

This is inspite of the colonial attempt via permanent settlement to create a replication of British post-feudal land relations in terms of "a strange group of great landlords [zamindars], a class whose annual payments of land revenue to the state were fixed ....at sums which were to remain unchanged for all time to come".[24] Instead of the emergence of capitalist agriculture, a class of large, parasitic and mainly absentee landlords operating in semi-feudal mode was brought into being, which, as Marx observed, was "a caricature of large-scale English landed estates".[25]

Lipton (1986) stresses the appropriation of the surplus as a process via maintenance of advance terms of trade between agriculture and industry i.e. cheap food and raw materials in order to sustain the profitability of urban private production.[26] In the Afro-Asian context the author believes that these developments - analytical or 'rational-choice' Marxism; the 'neo-classical political economy' of rent-seeking behaviour; and some aspects of the theory of collective or public goods - are relevant, and may shed light on why, in the course of development, the rural sectors especially the rural poor have paid more for state action, yet have got less out of them. Other pertinent areas were the approach may prove fruitful are questions such as "why

most Asian States subsidise farm inputs yet 'tax' farm outputs; why rice is taxed, in most cases, far more than wheat; why some, but not other, irrigation systems are efficiently managed through state action".[27]

In the author's view, society, polity and economy are dichotomised into rural and urban sectors and sectoral surplus flows as well as power structures within development follow on this divide. "Bigger farmers are seen as willingly captured by (and trading benefits with) the urban alliance, thereby transferring rural surpluses townwards".[28] A feature of the way in which a state with urban priorities seeks generation of rural surplus by allocating irrigation structures to maximise the extractable surplus for urban uses. However, inability of the modern urban state to oversee detailed operations of large irrigation systems leads to persistence of elements of feudalism leading to consumption of the process of surplus extraction by rural elites, such as has been noted by Wade (1982),[29] in the case of canal irrigation.

It is true of South Asian States that economic intervention by governments "usually sought to raise the savings rate by extracting surplus from rural persons, allegedly with low savings propensities, for capital-intensive and largely urban uses".[30] Bardhan (1985) notes that in many areas, agricultural "technique has remained extremely backward and ecologically fragile, not always because easily available technological improvements have been undercut by vested interests but often because prerequisites for such improvements involve massive public investment in irrigation"[31] and other sectors. An issue to which attention is drawn is whether the economic rate of return on expanded investment in State irrigation and agricultural research is or could be made adequate in backward regions. Although the author argues that "efficient growth in agriculture requires neither capital-intensities nor large scale or, as exemplified by Punjab, state success in surplus extraction probably does require that agriculture show such characteristics. Most of the state's machinery, if dominated by persons on classes or organisations seeking primarily to urbanise the surplus, will be unwilling to steer substantial income-generating resources - as opposed to palliatives and rhetoric-towards backward rural regions, small farmers, or similar groups".[32]

1.5 Rural Development Alternatives

Mishra & Chaudhury (1979) outlines the commencement of rural development initiatives in India through community development programmes followed by the programmes for increased agricultural production and rural employment. The objectives was sectoral in nature and concentrated largely on growth of agricultural and allied sectors. Programmes launched upto the Fifth Plan comprised, for example, Intensive Agricultural District Programme (IADP), Small Farmers Development Agency (SFDA), Tribal Area Development (TAD), Hill Area Development (HAD), Drought Prone Area Development Programme (DPAP), Command Area Development Programme (CADP) etc..[33] From the Sixth Plan onwards strategy has expanded towards an integrated rural development approach where the objectives are optimum utilisation of human & natural resources of the countryside for the purpose of creating self-sufficient rural communities living above the poverty line. In order to achieve this, the programme has to overcome economic as well as institutional bottlenecks, requiring comprehensive knowledge of the dynamics of rural economy, society and power structure in its class-aspects. The rural resource-base comprises manpower resources, natural

resources, infrastructural resources (including communications, electricity and irrigation), economic resources (by the type of economic activity) and livestock resources. The Integrated Rural Development Programme (IRDP) initiated in 1978-79 is designed to mobilise internal resources towards development. Other papers touching on similar issues are Menon (1979), and Chaudhuri (1979), Mukherjee (1979), Roopali (1979), Sen (1979), Thiagarajan (1979). The main philosophical contention on which these studies are based is again mobilisation of the 'rural surplus' although ostensibly for rural rather than urban use; the opposite prescription of diverting a position of urban surpluses to rural use is not argued after. Kumar (1979) and Saha (1979) consider aspects of rural education as an instrument for rural transformation while Bandopadhyay (1979) and Tete & Ghosh (1979) examine the potential role of voluntary agencies.

Another area attracting the attention of both policy makers and scholars is rural industrialisation. Nandy (1979) makes a case of for utilitarian trade and industry located in the countryside and serving local needs. Analogies are drawn from the traditional village-base Indian economy that is non-capitalist in structure. Mishra (1979) recommends the urgency of evolving an optimum mix of productive relations, technology and input-utilisation in order to introduce a commercial element into Indian agriculture which will feed the development of rural industry, especially agro-industry; the prescription includes service sector development for meeting rural credit needs as well as providing storage and marketing facilities. The need for avoidance of competitive tendencies between rural and urban industry is stressed although the solution of confining urban industry to the production of producer goods leaving consumer goods for rural industry appears a little simplistic. Arumukham (1979) explores the evolution of the concept of rural industrialisation over consecutive plans; a strong component of traditional, handicrafts, and khadi industries is prescribed keeping the objectives of upliftment of the rural community in mind.

Harris (1986) makes a study of the diversification of rural economic activity in South India, and particularly of the effect on rural non-farm activity of agricultural growth, through backward and forward linkages with non-agriculture. It is a characteristic of Asian countries that a large part of rural labour force is employed in rural non-agricultural activities; the proportion for India was 19% in 1981.[34] Percentages in other Asian countries are even higher. However, differences in capital intensity and labour productivity differentiate traditional and non-traditional industry raising the question whether "the activities which are of growing importance and in some countries are absorbing a larger share of the labour force [are] activities of last resort, or dynamic, growing ones?"[35] Increasing capitalisation of urban non-traditional industry in the course of industrial development lowers its labour-absorptive capacity, and this, in the view of a number of scholars, accounts for expansion of rural non-farm employment.

Mellor (1976) is of the view that both agricultural and non-agricultural growth are demand-led and that growth can be effectively achieved only through labour-intensive methods of production. It is argued that the accruals of additional income to the larger cultivators, through increased food production based on cost-decreasing technology, would be largely spent on non-agricultural goods and services, thereby stimulating the growth of labour-intensive consumer goods industries and services; this is antithetical to the emphasis on

capital-intensive industrial development of producer goods industries that has been the backbone of development strategy in India. Increased rural employment in the non-farm sector stimulates demand for food and encourages further agricultural growth. Harris' findings for South India show some decline over time in numbers of men depending primarily upon own cultivation/agricultural labour and corresponding increases in their absorption in non-farm activities; for females, however, overall female participation increases in both own cultivation/agricultural labour. However, since land-dispossession is not observed, the underlying labour dynamics is that of proletarianisation rather than depeasantisation; "small landholders have gained rather than lost land".[36] Evidence is found, however, of rural-to-urban flows of resources rather than of the growth of decentralised, labour-intensive production, especially through extension of lending activities by financial institutions and moneylenders and interest payments thereon. Hence the Mellorian thesis is demolished, especially for an economy with significant concentration of wealth.

Saith (1986) extends the analysis to rural industrialisation commencing by observing that many Asian countries show co-existence of high levels of rural poverty with high rural participation rates in non-farm activity, an indication of the fact that rural industrialisation and diversification is not fulfilling its poverty alleviation function.[37] He ascribes the present popularity of rural industrialisation/employment policy to the present convergence of interests of governments, private capital, international development agencies and NGOs (Non-government organisations), observing that failure of the modern industrial sector to generate employment growth, compatibility of rural industrialisation with international agency strategies of structural adjustment, and the fact that rural industrialisation "is viewed as an alternative or substitute for any deep-rooted redistributive land reform"[38] account for this. Insofar as the strategy has no adverse effect on landed vested interests, it is free from political obstacles that militate against effective land reforms, and at the same time is viewed as being capable of pre-empting rural out-migration and inflationary pressures on the food front that would follow from this. Two approaches are distinguished: the locational approach, which aims at industrial dispersion to the countryside, and the linkage approach, which is directed qualitatively to such economic activity which has significant developmental linkages with the rural sector.

The Asian experience is varied; however wage employment emerges as the single most important category, being particularly related, directly, to the overall rate of industrialisation and, inversely, to farm-size. In most of the slow-growing poor Asian economies participation of the rural poor in non-farm activity is part of household survival strategy and is practiced at exceedingly low levels of productivity. Acharya (1983) finds, for example, that in Bihar as many as 48% of the workers are engaged in occupations which are not economically viable, although only 6% of them were underemployed in a time-sense.[39] Participation by rural rich in non-farm activity is however out of a necessity to find alternative use for their capital and thus the non-farm sector has a crucial role to play in the differentiation of the peasantry.

Success of rural industrialisation depends greatly on the existence of a vast home market whereby the Mellorian thesis might materialise in the case of sustained growth rates of both agriculture and industry. Countries like China, Taiwan and South Korea where this

has been true exhibit productivity increases flowing from augmentation of technological absorptive capacities of agriculture combined with effective rural land reforms.

In India rural diversification strategy focusing on the non-farm sector has had more of a employment-orientation and comprises both rural public works (NREP) and rural special employment programmes (IRDP). Success of the programmes has to be evaluated on the criterion of participation, returns, efficiency, magnitude & timing of the programmes, and the degree of flaws in targeting, or linkages. IRDP covers a host of activities: minor irrigation, dairy development, animal husbandry and petty services, trade & industry; claims about its effectiveness have to be juxtaposed with allegations of mis-targeting, which is measured at levels as high as 42% in Assam and 35% in Punjab.[40] Misuse of funds and leakages are estimated by NABARD as amounting to 20%.[41] NREP programmes have also been the subject of several over-optimistic estimates; the real picture is one of high leakages and low coverage, coupled with the fact that in providing one-off assistance to poor beneficiaries the programme does not create extended capacity for high income generation, whereas longer term benefits are channeled to the rural rich who are able to exploit the rural infrastructure created; this is corroborated by studies of rural public works in Bangladesh also.[42] In view of the foregoing "rural industrialisation is not likely to be the panacea it is made out to be"[43] for reasons of intransitivity accross countries of the specific factors that might lead to its success and the fact that it can neither replace the need for redistributive agrarian reform or for the lack of performance in the main sectors of the economy i.e. "the tail must not be expected to wag the dog".[44]

1.6 Transforming Traditional Agriculture

Other studies[45] concentrate on technological/spatial features of rural development. Sen (1985) is an applied quantitative study in Hooghly, West Bengal, with community minor irrigation as its point of focus, besides making observations of rural industrialisation. Mazumder 985) surveys rural education with the finding that multidi-mension educational gaps prevail between rural and urban communities. Healthcare aspects are surveyed by Nag (1985) and Balagopal (1986). Non-farm activities such as dairy-development and fish-farming are surveyed respectively by Sarkar (1985) and Haque & Ray (1985); both reveal high performances for the upper strata of rural population. B.N.Sarkar (1985) considers development prospects of rural West Bengal in terms of occupational distribution and occupational mobility and reveals unequal access to development on the part of the rural poor. Chakroborty (1986) explores basic issues relating to rural poverty in West Bengal and comes to the conclusion that any urban-rural alliance that as exists is between traders and therefore financial in nature; within the sharecropping system no feasible alliance between urban industry and rural landholding classes can evolve that might lead to the formation of industrial capital. Chattopadhyay (1986) brings out sharp differentials in foodgrains performance between the wheat-region of India and the Eastern rice-region; whereas the green revolution has led to a major structural shift in wheat, this cannot be said of other foodgrains, where cultivation is still largely rain-dependent. Evidence is found of an industry-agriculture disjunction leading to much greater inflationary pressure on food prices in Eastern India; the study traces these to low irrigation-cover and limited achieve-ments on the HYV front; the solution recommended is to revamp agriculture through specially designed mixed-cropping and introduction

of a water regimen with larger accents on conjunctive use of surface and groundwater resources.[46] Unless a suitable thrust develops food insecurity shall prevail in a rural society where market forces of commercialisation and differentiation in peasantry have been pervasive enough to result in generally declining trends of per capita real consumption of food for the bottom 20% of population and for 50% of the rural population (in West Bengal), characterising bipolarity in access to food by rural class.[47]

Review of the literature reveals the importance of the agricultural sector to rural development, both in the question of agrarian transformation and in the means of achieving it, which country-experience indicates are parallel growth of industry and agriculture. In the Indian situation avoidance of depeasantisation would require a much greater focus on agricultural expansion than has hitherto been exercised especially in the face of the adverse prognoses governing rural industrialisation. Much of this thrust shall have to come from agricultural technology and irrigation and much of it shall now have to be concentrated in the agriculturally-weaker rice-growing regions.

Studies on rice economies such as Bray (1986) bring out the importance of water control for intensive wet-rice cultivation techniques, in which South Asia has no long-standing tradition.[48] Wet-rice technology which is more developed in East Asia is linked commensurately with intensification of skilled labour inputs and reduction in farm size, and trends to improve the position of the tenant farmer vis-a-vis the landlord. "There are significant divergence between the evolution of agricultural systems like those of Northern Europe and North America, which emphasis the importance of increasing the productivity of labour, and those of the rice economies of East Asia, which stress raising the productivity of land";[49] in the latter labour is in effect substituted for land. Capital-intensive agricultural innovation encourages polarisation of rural society into entrepreneurial farmers and landless labourers; on the other hand skill-oriented agricultural systems are less capital-intensive and do not promote economic inequalities to the same extent, allowing the small holder or tenant farmer to be on the same footing as the wealthy landlord insofar as the prospect of raising land productivity is concerned. Modern technology has an entry through fertilisers and pesticides and mechanisation of irrigation, efficacy of which is borne out by cholars such as Ishikawa & Francks (1986); however mechanisation of other agricultural processes faces technical obstacles because of restricted field-size caused by the demands of terrain and water control.[50] Wet-rice cultivation is thus more conducive to high labour absorption, mostly within the household sector and intermittently of skilled hired labour.

The above distinction on the basis of presence or absence of water control, between agricultural in East and South Asia is borne out in Vaidyanathan (1983). In the absence of water control techniques wet rice can often be grown using natural rainfall but crops are much less reliable, multi-cropping is seldom possible and output is relatively low. Contrasting agricultural growth in coastal Andhra Pradesh to South Korea. Rao (1986) observes forced commercialisation in both but land dispossesion in Andhra only - Korea with its rapid industrialisation was insulated.

Van Schendel (1986) takes a divergent position to that of Bray in attributing the absence of agrarian capitalism in South Asia to class factors rather than ecological and technological constraints. Making a

case study of Bengal (both West Bengal & Bangladesh) he observes that although double-cropping of rice without irrigation is possible because of an extended monsoon, productivity of land and usage of modern technological inputs has lagged behind other Asian societies, attributing this to extreme poverty of most of the cultivators. Commercialisation took place in the form of cash cropping; however because of ecological factors, this was based on indigenous crops that found new markets such as jute. Consistently low labour costs discouraged the introduction of labour-saving technology and an expanding rural proletariat was employed intermittently at low wages by smaller & larger cultivators, with its freedom of movement restricted by lack of well-paid non-agricultural employment. Penetration of external capital was confined to jute-producing tracts of east and central Bengal with little dynamic impact on the rice-surplus areas of North and West Bengal.[51]

Patnaik (1986) extends the analysis of agrarian classes into Indian agriculture using a Factor Analysis framework. Defining a Marxist hierarchy of resource endowments relative to production capacities over peasant households, she defines the exploitative linkage in terms of the 'distribution of poverty'. Keeping the resultant coexistence of multiple modes of production in mind the author states that there cannot be just one production function for the agricultural sector; there will instead be "a range of production functions attributable to a cross-sectional sample of households"[52] rendering all attempts at estimation of production functions quite meaningless. Similarly farm size groupings that are the basis of obtaining class-classifications of the rural population are also questioned inasmuch as they tend to gloss over qualitative difference of land and the degree of capital investment involved in each holding. "It is the labour-hiring holdings which show the largest relative use of modern equipment and highest application per acre of modern purchased inputs";[53] thus productivity is higher for such holdings than for poorer peasantry. Patnaik's findings are that with the help of a labour-exploitation index evidence of capitalist differentiation of agriculture emerges that is obscured by more conventional analyses.

Class considerations apart, the chances for rural development's success rests on the agricultural success rate. This is particularly so of West Bengal where an egalitarian land reform policy was initiated as far back as 1978 through 'Operation Barga' (recording the tenancy rights of sharecroppers) and revision of agricultural ceilings to 25 acres (10.12 ha), which have substantially altered rural land-relations and class structures. Adhikari (1985) identifies agricultural transformation with irrigation while pointing out that interaction of farm and non-farm sectors is indicative of the health of both. Confining the empirical part of his study to Nadia district, the author finds evidence of all-round agricultural progress. Another study by Das & Bhattacharyya (1985) in districts falling under the Indo-British Fertiliser Education Project shows credible results regardless of spatial separation of the districts covered; since the project was executed in conjunction with minor irrigation schemes the findings have special bearing on the present study. Mitra (1985) studies Cooch Behar district itself and stresses the importance of easy access to irrigation and electricity along with other technical and other service inputs in being able to spur "job-cum-production-oriented rural self-employment schemes (JPORSES)".[54]

Another important study from the standpoint of agricultural growth and its promotion is that of Ray & Bora (1986) which is directed

specifically towards marginal farmers in Nadia district of West Bengal and makes the point that slowness in agricultural development because of the preponderance of small holdings can be overcome by increasing the managerial ability of marginal farmers. Again using a Factor Analysis framework, with Principal Components being used to extract factors, highest factor loadings are found for use of pesticides, fertilisers and manures, accounting for 25% of total data variability. A further 18% of variance is explained by use of HYV, proximity to agricultural support systems and close monitoring of crop production. 13% of variance was explained by irrigation and timely supply of inputs, with the observation that the impact of irrigation is two-fold: besides directly expanding agricultural production it also provides opportunities for effective use of modern technological inputs such as fertilisers, pesticides, improved seeds etc..[55] A further 13% variance was explained by cropping intensity. Linked to these where other strategy-factors such as entrepreneurship development, credit support and agricultural extension.

IRRIGATION & RELATED ISSUES

1.7 Irrigation Technology

There are certain well-defined problems of choice associated with irrigation technology. In a situation where land and other factors of production can be assumed to be unconstrained, the irrigation potential of a water source depends on the demand for water, on one hand, and the supply of water on the other. Technological choices on the supply-side,depending on availability suitably-situated water sources, are between run-of-the-river (without storage), storage involving impounding of river/rain waters, and groundwater technologies. Water loss in the irrigation system can alternatively be treated as a subtraction to supply or addition to demand; however, both demand and supply of irrigation water have highly seasonal characteristics, with their peaks not necessarily being coincident.

A number of studies on technological aspects of irrigation are readily available. Hazlewood & Livingstone (1982) particularly considers the economics of irrigation in poor countries. It has to be noted that seasonal demand patterns are affected by crop combinations, differences in planting time and agricultural methods and practices. Two agricultural production models obtain; there are the Peasant Producer Model (PPM) and the Large Mechanised Farm Model (LMFM) of which the former is based on small farmers. Seasonal water demands of PPM fit seasonal water availability patterns much better than LMFM. While PPM is technically less efficient than LMFM because of higher seepage losses and less effective control of field applications as far as canal-oriented irrigations are concerned, economic efficiency in the former is greater because of concentration of water demand at times when it is most abundant. In practice the two production modes are complementary, rather than competing, alternatives. The introduction of storage irrigation schemes obviates the economic advantages of PPM, but in the general mix of all available irrigation technologies including groundwater, the dichotomy between technological and economic efficiency would persist and PPM emerges superior in terms of maximum area irrigable because of extensive rather than intensive water use. In the interests of optimality an efficient irrigation system requires a considerable degree of water management.[56] And in an objective appraisal of storage irrigation schemes, the cost of water storage will often exceed by far the costs of storage of grain that could be produced by non-storage irrigation technologies.

In the rural development perspective, PPM has the social benefits of economising on scarce management, in using cheap family labour and in dispersing the benefits of irrigation and is therefore conducive to a poor-country scenario. Although LMFM has pronounced technological advantages, its benefits are more private in nature and do not offer the "low-technology" solution appropriate to the more populous LDCs. Thus in a study of alternative irrigation systems the viewpoints of the irrigation engineers may often run counter to those of economists.

This point is also conceded by Withers & Vipond (1980): "there is a temptation for engineers to become engrossed in their engineering and to lose sight of the broader system within which it is destined to function. The purpose of irrigation is agriculture, not water conveyance. An effective water distribution system must be designed to overcome the limitation and take advantage of the virtues of the farming system for which it is to function. To determine the value of a proposed project one must make some measure of its benefits to the country".[57] Thus the choice of technique itself is cross-linked with the stage of development and infrastructure available to that community.

The design and implementation of irrigation systems is guided by a number of well-defined technical parameters that are common knowledge to the engineer. Flow characteristics of river waters and geological investigation of groundwater aquifers are primary to the assessment availability of water resources. There are often large areas of land so situated that available water can not be brought to them by canals, or else the cost of construction of gravity-assisted surface irrigation systems is prohibitive.

In many such areas, lift irrigation, whether of groundwater or surface water, is the practical alternative which requires pumping for irrigation and very often also for drainage purposes. Considerations of pumping loads and efficiencies thereof are thoroughly discussed in Israelsen & Hansen (1962). A major component of engineering design is the choice of pumping plant with its efficiency being defined as the ratio of power output to power input, where the latter may be electricity, diesel, etc. Another factor in pumping efficiency is the vertical distance that water has to be lifted i.e. water-head. There is thus a limit to maximum economic height of lift which is determined, in practice, by cost limitations rather than mechanical or power limitations. In the case of electrically-powered motors frequent power interruptions and variations in line voltage can prove to be major disadvantages. Another factor that has to be contended with is the practice often followed of staggering irrigation loads into the night hours both because of low demand and lower off-hour tariffs, where these apply.

The amount of water required for irrigation is itself dependent on weather, climatological factors and soil characteristics, not the least of which is soil permeability. In highly compacted soil this is low and as a result such soils may not be conducive to irrigation, regardless of climatological aridity. Soils can be characterised as saturated or unsaturated, and in all irrigation methods, water applied to the surface of the land subsequently enters the soil and is stored for later use by the plants. Water intakes of sandy unsaturated soils are generally high, whereas clayey soils, or soils that have become finely-textured because of excessive working and/or salinity, intakes may approach zero. Any soil that is highly compacted and saturated in nature is subjected to the risk of salinity if over-irrigated and

poorly drained. Thus the irrigation system has to provide for a water intake rate not detrimental to local soil quality.

Climatological factors in irrigation design appear in the influence of relative humidity on evaporation and transpiration, on which the type of crop is cultivated. The stages of growth have further influences. Water delivery by the irrigation system is therefore subject to tradeoff between evaporation loss and consumptive use. The tradeoff is subject to day-to-day variations on account of changing weather. Seasonal factors also predetermine consumptive requirements and thus the three major considerations which influence the time of irrigations and how much water should be applied are "(a) water needs of the crop, (b) availability of water with which to irrigate, and (c) capacity of the root-zone soil to store water".[58] Growth of most irrigated crops is stimulated by moderate quantities of soil moisture and retarded by either excessive or deficient amounts. Porosity of the soil is also essential to its moisture-retentive characteristics. Besides meeting immediate water needs of the growing crop, irrigation during the dormant season is often an economical means of storing water in the soil for future use. In places where winter precipitation is scanty, irrigation during the autumnal months is a means of saving water and of getting the land in favourable condition for the subsequent cropping season (in India, irrigation during late kharif, after the monsoon rains have subsided, is usually done with this object i.e. to stimulate early rabi cropping). Similarly, winter and spring irrigation serve the dual purpose of meeting the water needs of the crop in the field as well as maintaining soil-moisture for subsequent seasons. Besides, the nature of the crop sown determines the water requirements through the depth of the plant root zone and the length of vegetative, flowering and fruiting seasons; the requirement is highest during the vegetative stage when nitrogen is particularly essential and light, frequent irrigations are generally desirable especially for shallow-rooted crops; during the flowering stages the emphasis is more on maintenance of moist conditions in the soil that are conducive to the maturing of flowers into seed; at the fruiting stage, the root system reaches its maximum depth and consumptive water needs are at their lowest, except in the case of wet-fruiting crops like tomatoes, green peas etc. Tuber crops like potatoes, groundnut etc. however require uniform irrigation at all stages, although they thrive better in sandy, well-aerated soils. It is thus seen that the overall water needs of irrigation and its timing and frequency is determined by a complex of factors, all of which can lead to changes in cropping patterns as and when irrigation becomes available.

110750 12 JAN 1994

1.8 Irrigation Systems

Keeping in mind the indubitable importance of irrigation to agricultural development and agrarian transformation of the rural countryside in India, one must move on to questions confronting the choice of an appropriate technology. There has been an increasing debate on this in recent times, which has arisen both from environmental and cost-effectiveness considerations. The state of debate is summarised by the exchange between Dhawan (1989 a & 1989 b), Iyer (1989), Mitra (1990 a & 1990 b) and Jairath (1990). Dhawan makes out a case for big dams citing cost-efficiency criteria in their favour and questioning the apprehensions of their critics. While the critics are concerned about displacement of people and poor prospects for their rehabilitation, seismic hazards, environmental & ecological costs and 'exaggerated' claims of superior performance on the part of

big dams, Dhawan's position has consistently been to question the veracity of such objections as well as to demonstrate higher benefit-ratios for major irrigation projects. His argumentation on the cost aspects involve the contention that critics of that major irrigation works often tend to inflate the 'real' costs of major irrigation while discounting the full cost of minor irrigation. Capital costs are undoubtedly high for the former but they have the advantage of low recurring costs coupled with the absence of operational costs in the form for energy drawal for gravity-assist distribution networks. Minor irrigation, on the other hand, as Dhawan states is often shown to be effective on false cost premises, since the capital cost of rural electrification, the need for water-lift mechanism and operational & maintenance costs relating thereto tend to be ignored in the imputation of costs for minor irrigation schemes. Thus, Dhawan is convinced that major irrigation works cannot be excluded in an irrigation regimen designed to make conjunctive use of surface and sub-soil waters. Regarding seismic and environmental objections he takes the position that except when dam-locations are decided at fault-prone areas, documentary evidence of seismic risks is lacking, and that greater ecological damage is caused by deforestation and over-grazing. The other argument of minor irrigation proponents which he finds himself in disagreement with is the claim that smaller schemes account for better utilisation of irrigation potential; he is of the view that this is essentially a non-issue where uneven distribution of water resources in any case makes minor irrigation a complement to major irrigation, and not its substitute. Dhawan's position in his more detailed study of irrigation impact in Dhawan (1988)[59] is however less polemical since his empirical study does bear out higher cost-efficiency of minor irrigation in certain situations and states. This obviously would point to a choice of irrigation technology appropriate to circumstances where the absence of perennial groundwater resources in arid/semi-arid regions would imply greater dependence on the larger surface water schemes and the absence of perennial supplementary irrigation needs in other regions would imply the appropriateness of minor irrigation.

Mitra (1990b) is a rejoinder to Dhawan (1989a) and thus highlights the elements of the 'big dam' controversy. He states that although Dhawan's contention of underestimation of capital costs for minor irrigation works because of the exclusion of the private investment component in the cost-imputation process is welltaken, he is critical of the argument that long gestation of major irrigation works divorces the costs and benefits accruing from them on a time-scale, thus indicating lower cost-effectiveness; Mitra invokes the opportunity-cost argument to show that explicit imputation of interest cost of investment in major irrigation works would raise their capital costs even further. He also states that recurring costs on major irrigation are much larger because of the need for reservoir de-siltation etc.; Dhawan's analysis also overstates operational costs of minor irrigation. Thus in Mitra's view the cost-based argument in favour of big dams cannot offset the human and social costs of displacement and rehabilitation.

Iyer (1989) takes a more evenhanded view of the controversy emphasising conjunctive aspects of major and minor irrigation. The argument in favour of big dams is scale-economies in water storage and hydel generation, which cannot be replicated if the irrigation scheme in question is broken down into smaller-sized units. However, minor irrigation is more suited to a capital-scarce situation, is less prone to cost and time overruns, potential utilisation is better as also

water-economy, and considerations of distributional equity between head-reached farmers and tail-enders are peculiar to large canal networks and thus do not arise under minor irrigation. Thus the two systems are not competitive and need to be implemented in conjunction.

Extant literature on irrigation impact e.g. Dhawan (1988) decomposes gross irrigation impact into a number of quantifiable irrigation impact-categories: these are impact on cropping intensity, impact on agricultural yields, impact on crop patterns, and area & output impact. Of these the first is measured by a rate at which multiple cropping replaces mono-cropping, the second by increase in productivity of other inputs on provision of irrigated water and the third by changes in cropping pattern following on introduction of irrigation. Besides these, area & output impact result from increased acreage and expanded output. Dhawan's own observation is that where rainfall is concentrated, output impact of irrigation generally tends to be low specially since acquisition of supplementary irrigation water often leads to a switch from low irrigation-intensity crops like coarse grains to fine grains that are irrigation intensive. Relations between irrigation intensity and crop intensity as well as dynamics of fertiliser use are well understood by now and are commented on by recent studies like Raju (1990) and the study on agricultural productivity by Dev (1991).

The recent papers by Dhawan address the problem of irrigation impact in high rainfall areas more specifically. Commenting on the study of Kannan & Pushpangadan in the context of Kerala. Dhawan (1988)[60] states that in high rainfall areas irrigation is not a highly complementary input to chemical fertilisers, water-needs of which can also be met by rainfall and moisture-preservation in such areas. Irrigation in such areas can thus acquire a seasonal characteristic. Thus for irrigation development in high rainfall areas, irrigation must possess the following attributes:

"i) it is mainly oriented towards the non-monsoon period;
ii) it is flexible enough to be deployed for kharif crops in the event of a big break in the monsoon;
iii) if in the public sector, it is well-managed by the state. If it is in the private sector, the state must manage well the infrastructure like power generation and rural electrification that have a close bearing on the success of private irrigation based on electric pumpsets."[61]

Dhawan (1988 b) makes another study of irrigation impact in the high rainfall areas of the Konkan region falling within the Kal irrigation project. In such regions, Dhawan states that because crop yields are already high because of monsoon rain, the yield-impact of irrigation is lower. Study of the Kal command area indicates less water-drawal during the wet season along with switching from crops with low irrigation requirements to those with high requirements - because of these changes in cropping, irrigation waters thus end to be fully utilised even when crop area benefits happen to be low. "Thus in the conventional paradigm for high rainfall areas the main impact of irrigation would come via the intensity of cropping effect, and far less from the yield and crop pattern effects".[62]

Another aspect of the impact of irrigation is its stabilising influence on agricultural output between normal and drought areas. This is addressed by Dhawan (1987) which shows that the degree of stabilisation achieved is inversely related to rainfall. Thus in high rainfall areas farm instability may persist despite irrigation. The

author however qualifies this by stating that stability is also conditioned by the extensive development of reliable private tubewell irrigation, citing Punjab & Haryana as examples. In states where there is considerable dependence on tanks the stabilising effect of irrigation is lower because of the high sensitivity of tank-based irrigation to variations in rainfall.

1.9 Irrigation Impact Studies

Vaidhyanathan (1987) is a comprehensive survey of literature on irrigation and agricultural growth. Salient developments have been rising plan outlays on irrigation, a shift towards minor irrigation works (particularly groundwater development) and better water-management including conjunctive use of surface and ground water. On the other hand, common concerns are the cost-effectiveness of the investment particularly in terms of agricultural productivity, the potential role of irrigation in accentuating agrarian disparities, finance of irrigation works and cost recovery against them, and the environmental impact of irrigation. The study highlights the persistent gap between irrigational potential and its utilisation. Conjunctive surface and tubewell systems however are the major source of improvement in irrigation quality. Productivity studies show that besides raising crop yields irrigation also permits more high-valued crops to be grown and increased cropping intensity, and that this is highest where conjunctive systems operate. Better performance of wells vis-a-vis tanks and canals is also supported; however agrarian disparities are multiplied by the former. Another conceptual problem alluded to is that, with most irrigation-impact studies being micro-economic in formulation, it is often difficult to measure the direct impact of irrigation on productivity because of strong complementarity between water and other agricultural inputs, especially fertilisers. This problem that has detracted from the utility of micro-level surveys needs to be tackled methodologically.

An important bloc within the literature on the economics of irrigation relates to micro-level studies on the impact of irrigation projects. These studies cover planning, execution and management of irrigation projects, the benefits accruing from them, as well as social costs, and studies inefficiency by irrigation-type, including comparative studies. Conceptual problems emergent are the increasing gap between "irrigation potential" and "actual utilisation", definitions of "small farmers" when evaluating irrigation impact, and the precise nature of "costs" and "benefits" to be included in evaluating irrigation impact. The first confusion is on account of the manner of presentation of statistical information whereby potential is reported to have been created even when distribution works are incomplete, and utilisation is reported on the basis of applications received rather than area actually irrigated, leading to overestimation of both. Because of the form of the loan programmes for small farmers, farming out of landholdings within the family is not uncommon in order to gain eligibility. Questions also pertain to whether the costs of works other than headworks should be included, whether costs of older projects should be notionally revalued to present levels, and relating to the treatment of interest charges on capital investment, as also the treatment of direct versus indirect benefits.[63]

The methodology commonly used in micro-level impact studies is the 'before' and 'after' approach although the alternative of comparing farms with irrigation to those without irrigation also exist. Thakur &

Kumar (1987) decompose the output growth resultant on irrigation into that directly attributable to increased availability of water itself and that resultant on increased utilisation of other inputs. Their study reports in the context of western U.P. that privately owned tubewells exhibit better water-management whereas government tubewells and canal irrigation projects report irregularity and inadequacy in water availability, and waterlogging with consequent depletion of soil fertility in the case of the latter. Private tubewells also show maximum cropping intensity and much more diversified cropping patterns along with more intensive use of other farm inputs, chief of which is fertiliser. Since private schemes are of a low-cost nature, these advantages are even more tangible in the cost-benefit perspective. Similar results are reported for Punjab in Sankhayan & Singh (1987).

Sidhu,Chand & Kaul (1987) make a comparison between performances of alternative irrigation systems in Punjab. Yields are generally found to be higher under tubewells compared to canals and are highest for such farms where both diesel and electric installations are available because of better control over water on an "as and when needed" basis.[64] Complementarity between irrigation and fertiliser use was also borne out, bringing out the higher economic efficiency of tubewell farms compared to canal farms, with electrical sources proving superior to diesel sources.[65] Kalita & Rajbangshi (1987), in investigating management efficiency of deep tubewell efficiency in Assam show that the viability of DTWs can only be established where more than 50 percent coverage is provided to the command area by the irrigation facilities created. This also brings out the intrinsic advantage that private tubewells have. Concurrence on the general superiority of lift to canal irrigation is also found in Singh (1987), Joseph (1987) and Devi & Seetharaman (1987).

Giri & Mallik (1987) make a more pointed comparison between private and public irrigation sources in Nadia in West Bengal. While DTW beneficiaries are dominated by small and marginal segments, the lower size-groups exhibit proportionately higher land acquisition after becoming beneficiaries, financing it if necessary from secondary income sources. Land utilisation around the DTWs is fullest during the kharif season and poorest during the pre-kharif. However, cropping intensity is found to increase with landholding size, with a particularly large amount of leasings to agricultural labourers and marginal farmers during the rabi season. Performance of private STWs is found to exceed significantly that of the DTWs, although greater inequalities characterise diesel-operated STWs where irrigation costs are higher. The authors recommend encouragement of private irrigation with a focus on electricity to minimise land inequality. Mishra & Gupta (1987) find similarly high cropping intensities in the case of electric irrigation installations in Ratlam in M.P. and maximum change in cropping patterns during the rabi season. A high rate of labour absorption is also reported for electric pumpsets. Extending the studies in a West Bengal context, Misra (1987) finds a positive impact of irrigation on kharif paddy, both in terms of extended cropping and increased use of modern inputs, in the case of canal-irrigated areas in Birbhum. Chaudhury (1987) is of the view that sufficient consideration has not been given to tapping of groundwater resources in both North Bengal and South Bengal. Technical operational advantages of DTWs are nullified by numerous administrative and other problems, chief of which are high installation cost, long gestation period, exorbitant rabi and summer water-rates and long duration of repair work. Thus STWs are to be encouraged to achieve desired objectives. Ghosh (1987) in his analysis of canal irrigation in

Burdwan shows rise in cropping intensity, shift to a paddy-based cropping pattern and sharp increases in farm incomes and labour absorption. Similar findings with respect to labour utilisation are found in Charan (1987) and Patel & Patel (1987) in Gujarat and Adinarayana (1987) in Andhra Pradesh.

Patel & Singh (1987) in a study of the utilisation of irrigation potential in Mehsana in Gujarat show the highest utilisation in the case of the electrified tubewells. For both electrified and diesel dug-cum-bore-wells the reason for under-utilisation were scarcity of fuel and electricity and water wastages because of the lack of underground pipelines. Similar wastage problems in the case of canal irrigation because of the transpirational loss and unlined distributional channels are reported by Dangat & Rahane (1987) in Maharashtra and Puttanna & Hema (1987) in Gudamgiri in Karnataka.

Hiremath (1987) is of the view that in the face of their complementarities, "the new direction of research must focus on the conjunctive use of water- both surface and underground. In the wider sense, an integrated policy of scientific management of water should meet the requirements of not only of crop production, but also of industry, human and livestock consumption, flood control, hydropower, electric generation, recreation and navigation. Such studies have been attempted abroad and may be taken up for further analysis of efficiency of water use in an integrated fashion".[66]

1.10 Extended Issues

Given the status of thinking on "big-dam" irrigation of the surface type versus minor, particularly, groundwater-based irrigation, a review of the literature on the energy aspects in Indian agriculture is called for. Most studies on agricultural energy-demand in India have so far been based on aggregated macro-level data and overall national averages and trends[67]. However, with energy demand in agriculture being dependent on a complex of factors such as trends in agricultural growth and technologies thereof, efficiencies in energy utilisation, agro-climatic conditions etc., disaggregated studies are often more instructive and hence more appropriate for utilitarian and policy purposes focusing, as they do, on inter-crop and inter-zonal variations as also between farmers with unequal access to technology.

Recent studies on hand stress different aspects. Parikh & Kromer (1985) models energy-agriculture interactions in a linear programming framework contextually in the case of Bangladesh. The study covers all sources of energy, both of commercial and non-commercial varieties and study is made of the energy implications of a switchover to HYV. Babu & Hallam (1989) particularly considers the case of electricity in the context of irrigation in cotton farms in the Coimbatore region in Tamil Nadu, in the form of a theoretical model under uncertainty. In a situation where both diesel and electrical alternatives are available for irrigation purposes, no farmer exclusively depends on electricity alone, mainly because of the highly subsidised nature of rural electricity and higher costs involved in diesel installations. Classifying small farmers as most risk-averse and large farmers to be least risk-averse, because of disruption in electricity supply, an elements of stochasticity is introduced into resultant crop-yield patterns. Crops like cotton and fine foodgrains are subject to greater yield uncertainty because larger amount of water is required; coarse crops are less risky. Risk attitudes change in the face of a hypothetical scenario of enhanced and more regular supply of

electricity, with greater inclination of farmers to switch to risky crops. However, attitudinal shifts are different by farming class: small farmers increasing the usage of animal energy in complement to electrical energy, whereas medium and large farmers recourse to mechanical alternatives. However, existence of strong complementarity between the demand for electrical energy and demand for human labour results in across-the-board increases in labour absorption in the agricultural sectors in response to increased availability of electricity. Electrical energy thus proves to be a marginally risk-reducing input and its increased use decreases yield uncertainty. Correlations of crop yield variance is particularly high for cash crops in comparison to coarse crops.

Dhawan & Mittal (1990) relate cropping demands for energy to renewable/non-renewable nature of the energy source. Results obtained show that yield uncertainty is higher for regions with a rain-fed agricultural profile, both because need for irrigation and consequent energy demand is less and fertiliser use is lowered by monsoon uncertainties. Furthermore, a tendency is revealed for agriculturally-advanced states to depend much more on non-renewable direct energy sources like diesel, petrol, etc. and indirect ones like fertilisers, pesticides, etc. than rain-dependent agriculturally less-advanced states where dependence on renewable energy is higher and that on modern agro-inputs is lower. The mix of factors explains the high complementarity between irrigation and fertilisers as well as greater degree of yield stability in such rain-scarce states as are already highly irrigation-dependent.

Moulik, Dholakia & Shukla (1990) treat the problem of energy demand forecasting in agriculture at length. The study confines itself to electrical versus fossil-fuel energy-sources and to six major crops. Differences in agro-climatic conditions etc. between states are taken account of. With specific reference to pumping irrigation which is the second most important energy input in Indian agriculture after fertilisers, diesel requirements are based on the assumed average of 6.5 HP pumpsets consuming 1.5 litres of HSD per hour of pump operation. Electrical pumping operations use an assumed size of 7.5 HP per electrical pumpset with 4 kwh of electricity being consumed per hour of pump operation. Highest crop requirements for irrigation were found to be for paddy followed by sugarcane, wheat and cotton in serial order; pumping requirements verge on nil for pulses and are quite small for oil-seeds. Even where mechanisation in ploughing/threshing operations is in evidence, the bulk of energy requirements in agriculture (ranging from 60-95 percent) is on account of fertilisers and irrigation. Technology variables enter into the study though its subdivision into three technological categories viz. traditional, transitional and modern; of the six crops considered, modern technologies have penetrated to the largest extent in foodgrains & cotton and least into pulses. Highest energy demands come from modern technologies. Elasticity of energy demand is uniformly greater than unity especially under the projective assumption of greater penetration of modern technology. Thus "an attempt to accelerate the rate of growth of agricultural production through adoption of modern inputs and technology would necessarily result in a more than proportionate acceleration in the total energy demand in the agricultural sector".[68] However, no significant rank correlation between rates of growth of production and corresponding rates of growth in energy demand across different crop is observed, particularly in the face of gradual modernisation of technologies.Thus high growth rate of production is not correlated with high growth rate

of energy consumption and hence the crops to which each of this rates pertain are non-identical.

Another area of research in irrigation studies is the economics of irrigation rates and tariffs. Since the irrigation thrust in the country has required massive injections of investment, questions have arisen as to whether there has not been over-investment in this one area, relating to investment in, say, production of complementary inputs such as fertiliser. This has lead to a focus on recoupment of costs on those irrigation projects largely financed by governments.

A study addressing the issues from this standpoint is Ansari (1968). As an exercise in price theory, the provision of services like irrigation have so large a component of invisible costs that marginal cost is relatively insignificant, remaining always below average cost, and precluding marginal-cost pricing. The welfare concept involved has led to the practice of state subsidies. Ansari's study is contextually on Uttar Pradesh & Punjab and brings out the importance of the pricing versus welfare equation.

One of the reasons why the subsidies have been prevalent is because of under-utilisation of irrigation capacities, particularly in large canal irrigation projects. This is however simplistic: very often construction of distribution channels is tardy and inadequate, the changes in cropping pattern needed to make optimal use of irrigation are slow in coming, and there may be constraints on the availability to the farmers of complementary inputs such as fertilisers. In the light of this, little can be done to resolve the problem of under-utilisation by mere manipulation of water rates to low levels. The study picks up all the main threads of the debate. In favour of state subsidies are the arguments of marginal-cost, pricing in the case of decreasing-cost industries, where losses are necessarily incurred on the marginal-cost pricing principle, and the argument of the large indirect benefits that derive from irrigation, as first defined by Gadgil.[69] The author's view is that these arguments are insubstantial and subsidies can be obviated by allowing for sufficiently long gestation periods. Since agricultural policy in the 1980s has used monetarist tools such as price subsidies on foodgrains and fertilisers, the findings of Ratha & Sharma (1992), which show that a rolling-back of these subsidies, with parallel increase in investment on irrigation may prove to be the most effective way of expanding food supplies, is relevant here. However in conceding that the costs of irrigation should be recovered, certain definitional problems arise as to what these costs are - the simple commercial principle of discounting capital investment at appropriate interest rates is inappropriate in the case of irrigation because interest charges are the bulk of irrigation costs and because of long discounting horizons. Another question which arises is whether the valuation of initial capital investment should be scaled up with subsequent rises in price levels. Irrigation also has a dual impact: besides immediate augmentation of yields and crop output, it has protective attributes that stabilise cultivation and farm incomes. Hence in addition to actual water rates there is a case for levying agricultural cesses etc. on irrigation beneficiaries to cover this aspect as well as to recoup the cost of excess capacity that has to be borne during years of normal and good rainfall. In respect of the rates themselves, volumetric tariffs are scientific and inculcate an efficient water management regime, but are difficult to implement except in tubewell irrigation where water discharge is at a metered rate; the alternative crop-wise fixation of rates is often found to be

an encouragement to wasteful water-usage practices.

More recent studies on these lines e.g. Sangal (1991) or Shah (1991) extend the analysis to questions of economic pricing on irrigation waters and to the emergence of water markets at the micro-level especially in dry drought-prone areas. Sangal's study derives from a concern for restoring financial viability to the SEBs/Irrigation Departments/Minor Irrigation Corporations. Irrigation waters, as a commodity, are subject to the influence of an increasing general price index insofar as irrigation costs escalate; however no corresponding upward revision in irrigation rates takes place. The 1987 National Water Policy specifies that "water rates should be such as to convey the scarcity value of the resources to the users and to foster the motivation for economy in water use",[70] and that at least a part of the capital cost of irrigation works should recouped from water charges. Similarly, annual operation and maintenance charges that now vary between 11 percent to 22.5 percent of capital cost should be recovered. What the study stresses is the need for a uniform policy on fixation of water rates applicable to all states, to remove the present inter-state variations.

Shah's study is on the newly-emerging capitalist institution of water markets whereby private investment in irrigation mechanisms is undertaken with a commercial profit inclination beyond actual user-benefits. Particularly in the case of tubewells, evidence is found in regions as diverse as West Bengal, Andhra Pradesh, Gujarat, Tamil Nadu and Bihar, Assam & Uttar Pradesh of the emergence of water markets that develop from an initial system of payments for water-drawal being rendered in kind, to more exploitative crop- and profit-sharing arrangements, with crop shares in lieu of water being as high as one-third. Cash-sales of water are also increasingly common. Water markets are natural oligopolies with benefits of raising effective irrigation potential and utilisation but the drawback of leading to possible over-exploitation of groundwater resources. The degree of monopoly power enjoyed by individual oligopolists and hence the water prices charged depend the normal extent of rainfall, watertable drafts, cropping patterns, high cost of modern irrigation technology, absence of canals and alternative irrigation sources and poor progress in rural electrification, with the result that the most aggressive water markets operate in the most arid regions of the country. From the point of view of these water markets, a flat, horsepower-linked water tariff (FR) proves to be superior to pro rata (PR) or volumetric tariffs, as it reduces oligopolistic tendencies in the water market. For the SEBs "FR may become attractive for its administrative simplicity, elimination of metering costs and hassles, and reduction in the intentive to pilfer power"[71] besides helping the SEBs to break even on agricultural operations by marginally reducing power subsidies. However this has to be concomitant with provision of high quality, uninterrupted and reliable power supply. Other studies which document the emergence of water markets are Kolavalli & Chicoine (1987), Pant (1988), Shah (1986), Shankar (1989), REC (1985) and Saleth (1991). The role of water markets in influencing water-use patterns as also that of electricity pricing is also covered in Moench (1992) which focuses on the risks of overdrawal of groundwater otherwise. The new NABARD guidelines relating to spacing etc. and scope for management reform are also covered by this study.

As a tangential reference is made in the findings of the present study to the labour impact of irrigation schemes, some exploration of existing literature on rural employment and agricultural labour

utilisation is warranted. In scope, the study of rural labour use by Vaidyanathan (1986) is widest. Citing NSS statistics for 1977-78, more than 60% of the rural labour force (both male & female) are seen to be self-employed or employed in the family enterprises with the rest constituting wage labour; further, 80% of males and 86% of females are employed in agriculture and allied activities. From NSS information on the break-up of agricultural work by major operations, marked differences in the relative importance of female labour to different operations emerge; women figure pre-eminently in transplantation, weeding and harvesting, outnumbering males in the casual-labour category in the latter two operations, but play minor roles in other operations, notably ploughing and non-manual works.[72] Regional variations however exist. Participation rates in the labour force vary between 55% in Kerala to over 70% in Andhra Pradesh for males; and for females from 13-14 percent in Assam to 54 percent in Rajasthan.[73] Ishikawa's distinctions between land-augmenting technological change and labour-substituting technological change are found useful in explaining varying labour intensities in agriculture. Bardhan's analysis of the same variations across farms in Bengal also emphasise differences in technology and institutions; irrigation, multiple cropping, fertilisers and HYV are the major technological factors in his analysis, while farm size, leased-in acreages and burgaining strength of labour are prominent institutional factors.[74] Consensus exists that irrigation is land-augmenting and therefore conducive to the absorption of more labour. Agarwal's and Binswanger's evidence for India however indicates that all other forms of mechanisation are labour-saving.

The special importance accorded to by Ishikawa and others to irrigation is because its assured and timely availability increases the scope for using other agricultural inputs; also extension and diversification of cropping is facilitated, which have labour implications. Vaidhyanathan's linear multiple regression analysis of the inter-state cross-section shows that, *ceteris paribus*, high rainfall regions have high labour intensity, and the higher the proportion of irrigated area, the higher the labour intensity - these relations are all statistically significant. Statistical significance is also found from the multiple regression for the finding that states with a higher proportion of wage labour in total agricultural labour input also have higher total labour input per unit of land. This order of relationships can safely be assumed to persist as long as there is no large-scale resorting to farm mechanisation.

Kurian (1990) tackles the problems posed by the declining employment elasticity of agricultural output, visible since the mid-60s, in response to which the agricultural worker gets only around 130 days of employment in irrigated double-cropped areas and 80 days in dry areas.[75] Evidence from other related studies is also cited that reveals the decline in the real wages of agricultural labour in many states, aggravating rural poverty. Part of the problem has originated from the marginalisation of holdings. Three-fourths of marginal holdings are accounted for by just six states in the country; of these West Bengal accounts for a high 32.3%. For states where high marginalisation coincides with a high percentage of rural poor, the problem is acute. However the prevalence of rural poverty is also found to coincide with the lack of development of irrigation and thus "the success of employment generation and poverty alleviation programmes critically depend on the development of assured and controlled irrigation";[76] this the author says is particularly true of eastern India. Findings on labour utilisation by crop in the study

show that on the whole low labour absorption is associated with low level of technology and non-irrigated farming and plan priorities on the generation of rural employment have a natural ally in the development of irrigation.

Some aspects peculiar to female labour are brought out in Bhalla (1989) and Chen (1989). Bhalla cites the experience of the three pioneering states in the field of irrigation i.e. Punjab, Haryana and Uttar Pradesh where the initial response to green revolution technology was a sustained rise in labour use per hectare, followed by peaking in the mid-70s and than a subsequent decline as a result of adoption of mechanised farming; even in these states however total employment levels in agriculture have been sustained by expansion of gross cropped area as well as cropping shifts to relatively more labour intensive crops. With reference to female labour it is found that in times of absolute labour scarcity demand for female labour, both of the unpaid family variety and the hired variety, goes up as a method of buffering the sharp increases in wage rates that would otherwise take place during a peak activity period. Thus, even though the major employment season provides more employment to women, this is conditioned by the existence of male labour supply bottlenecks which result in a female 'peak season shift'. High absorption of female labour is accounted for both by small farms and very big ones. Despite this most women labourers belong to the casual labour category. Chen's study is on women's role in agriculture by agro-ecological zones because of intrinsic differences in cropping by region. Incidence of female agricultural labourers is higher in irrigated paddy regions, as well as those with low fine cereal-cropping, low agricultural growth and high inequality in land ownership; in the rain-fed paddy areas however participation of women labour is not as high. A very large part of this female labour is unpaid and drawn from the family in the case of irrigated paddy, and consists of landless agricultural labour in the case of rain-fed paddy. In areas where wheat predominates however there are lower female labour intensities overall.

1.11 Area Studies of Relevance

A study which closely parallels the present one in its irrigation aspects is Palmer-Jones (1992), which explores groundwater irrigation and the growth of agricultural production in the region of Bangladesh (contiguous to the present areas for case-study). The similarity extends to common demography, ecology and socio-economic conditions "despite abundant ground and surface water resources apparently favourably climate",[77] Bangladesh has lagged behind, like eastern India in the development of agriculture and in poverty alleviation. Part of the malady is ascribed to the existence of policies more attuned to circumstances where groundwater is scarce and its use needs to be regulated. These conflict with the priorities of exploitation of groundwater in groundwater-abundant regions where the incidence of poverty and its magnitude is severe.

A debate has centered around whether private sector exploitation of groundwater is likely to lead to excessive and socially undesirable watertable draw-down. Criticism of the State-sector, on the other hand, points out that it strengthens monopolistic elements in the emerging water markets. The experience of Bangladesh however shows that private sector irrigation has generated few negative externalities, and has supported high growth especially of <u>boro</u> rice. Crops, with some cereal-substitution for jute, oilseeds and pulses. Rising competition between traditional <u>aus</u> paddy areas and HYV <u>boro</u> areas is

also evident. Amam paddy however remains more or less stable because of high rainfall. The positive trends in boro production have, since the late 1980s, been supported largely by spread of private sector STWs. Although DTWs in the State-sector have also increased, their operability and command acreages are subject to greater uncertainty. Among the problems particularly associated with DTWs have been low capacity utilisation and fears of water-lordism (through water markets).

All these are in contradiction with thinking in government and academic circles, and even in the World Bank, that the obstacles to economic development in this region lay predominantly "in the malign influence of the agrarian structure and of the rural elites in particular";[78] this was interpreted as an obstacle to irrigation-led agricultural growth. Modern irrigation technologies which have significant economies of scale, were not considered suitable for an agrarian economy with small and highly fragmented farms. Against this, Palmer-Jones conclude that it has been the STWs, which had previously been perceived as inappropriate, that have generated agricultural growth in Bangladesh, and this has been without the negative draw-down externalities that had been anticipated. Although the rise of water markets was somewhat unanticipated, a positive feature in their existence has been their impact on poverty alleviation through extending irrigation support to holdings previously considered to be too small for irrigation to be viable. Another point to be noted is that, with the existence of water markets, any low-technology solution for small holders, such as manually-powered dug-well irrigation turns out to be infructuous because in the face of its effort-intensiveness, buying and selling water from STWs is considered more advantageous.

From the same criterio of close similarity to the field chosen for the present study, although methodologically and qualitatively divergent is the status report of Choudhury,Mukhopadhyay & Subba (1986) which has covered existing irrigation schemes in North Bengal. This study is from the sociological standpoint, in the context of the Ministry of Agriculture, Government of West Bengal sponsored project. And covers, on a sample-basis, three districts where the project in operation, including parts of Cooch Behar. Under scheme-classification for the minor irrigation schemes, the majority of schemeholders, although private STWs revealed a smaller percentage of marginal farmers. STW dominance is also noted in terms of seasonal irrigated areas, as also concentration of State-sector scheme-activity only during the rabi season. A swing to cultivation of HYV crop varieties is also noted under the influence of irrigation. Land transactions also reveal some interesting features, with irrigation beneficiaries marginally increasing purchases and reducing sales of unirrigated land after getting the benefit of irrigation. Purchases of other rural assets show marginal increase. However irrigation also appears to have contributed to indebtedness. Irrigation demand is observed to peak during the rabi season and to be at an extreme low during kharif when rainfall is maximum.

POWER

1.12 The Literature on Power

Literature on power and energy is briefly focused on here as it is the subject of a separate chapter. Most of the studies extant are from the technological rather than the economic standpoint indicating that the economics of power generation and distribution is an area of

relatively recent interest.

Pachauri (1977) is a detailed study of the energy linkages of economic development of India, covering the gamut of energy resources available to the country, both commercial and non-commercial in nature. Problems of energy-demand forecasting are alluded to and different methodologies adopted are compared, particularly that of the NCAER (1965),[79] Fuel Policy Committee (1974)[80] and Parikh (1976);[81] sectoral aspects of the growth of energy demand are also considered. It is pointed out that the forecasts which exist are based on rigid end-use coefficients and constant prices and incomes and hence discount substitution effects that stem from economic development and with increasing availability of commercial fuels.

From the point of view of electricity, the natural endowments of coal and hydro electric resources in the country are important; the hydel potentials are highly dispersed and can thus become good supplements to thermal generation. The inherent advantages of hydel generation that are cited are renewable nature of hydel resources, less adverse environmental effects, instant start-up and loading which makes this particularly suitable for meeting peaking demands, low operating and maintenance expenses and less frequent break-downs.[82] Parikh's analysis, using a multi-region, multi-period linear programming model, argues for the economically viable nature of fastbreeder reactor nuclear power generation technology as a solution to the problems of coal movement; in its absence the country would have excessive dependence on coal-based generation. The viability of non-conventional energy sources e.g. solar photovoltaic panels, biogas and wind energy is also explored, as also the organisational problems of administering such a large energy sector.

Power occupies a unique position in economic development; average annual growth in generation over the plan period has been near 10 percent.[83] However, rational planning of power development in the country is inhibited by adherence to outdated forecasting methods. Of these the CEA uses the most sophisticated methodology comprising the trend method, the end-use method by sector/industry of use, and Scheer's formula which is based on the thesis that for every 100-fold increase in per capita generation, the rate of growth of generation will be reduced by half. These macroeconomic methods are supplemented by micro-level studies in Andhra Pradesh in Pachauri (1975).[84] Econometric forecasts in the latter are found to be log-linear in type. The plight of the State Electricity Board (SEB) in the face of inadequate revenues is discussed and the need for revision of tariffs, particularly in rural sector, as well as reduction in operating expenses, transmission and distribution losses and cost-overruns in projects is stressed. In this context the significant impact expected from the Rural Electrification Corporation (REC) is mentioned alongwith the schemes that it assists, this need being emphasised by the fact that "it is obvious that rural electrification can have social benefits greatly in excess of private benefits to the direct users of these schemes. The availability of power in rural areas opens up the possibility for the implementation of various types of schemes, which would lead to overall development of the rural sector in the country".[85]

Tariff problems are also alluded to in Venkataraman (1972). The practice of differing rates for different user categories is a historical outgrowth that has little rational basis, often leaving open the question as to whether the rates cover the actual costs of

services rendered. World Bank appraisals in 1962 and in recent times have been critical of the lack of a clear-cut tariff policy in the Indian sector. For the most part, power demand over all states is largely for the industrial high-tension loads. Domestic consumption is around 10 percent or less but "it is this narrow section that has to bear a considerable burden by way of rates".[86] Although power consumption in the rural sector, particularly for irrigational purposes is often accused of being responsible for the deficit financial positions of most SEBs, great variation is found between states in this category of consumption. It is mainly industrial power (both HT & LT), which consumes 73.8 percent of total sales but contributes only 50 percent to revenue, that is culpable; if industrial rates are low the burden on the others is bound to be heavy.[87]

In respect of rural electrification, the basic problem of low agricultural load growth is encountered. However rural electrification may actually help load development by diversifying this load, although subsidy element may initially be necessary as is the case in most other countries. This point is taken up more specifically in Paliwal (1985) which also relates rural electrification to rural development particularly in the agricultural sector. Where rural electrification has resulted in large losses, the reason has generally been non-materialisation of loads, for which other infrastructural lacunae are equally responsible.[88] The positive results of well-energisation are however well evident. [A more detailed reading of this literature is made in the next chapter, which also has references to studies in power engineering and development in India e.g. Narayan (1990), Kati (1990), Naidu (1990), Varma & Rao (1992), Dasgupta (1992) and in West Bengal e.g. Ghatak (1985) and Chakraborty, Sanyal & Sikdar (1991). Other literature references which supplement this chapter are on the power scenario in general e.g. Puttaswamy(1984), Jain (1984), Sah (1984), Desai (1987), Rajagopal (1988), Bami (1988); and rural electrification in particular e.g. Kochar & Dua (1978) and Verma (1978). With the help of these as well as published official statistics and reports, the problems and prospects of the power sector are explored, to lay a foundation for the present study.

References

1. Howe C.W, Natural Resource Economics, John Wiley & Sons,Inc.,New York, 1979, pp.3-5.
2. Ibid pp.11-12.
3. World Development Report 1991: The Challenge of Development, World Bank, Oxford University Press, Washington, pp.31.
4. Ibid pp.32.
5. Danda K. Ajit, Development Perspectives and the Rural Poor,in Mishra S.Madhu(ed), Rural Development in Eastern & North Eastern India,Publications Division,IIM,Calcutta,1988.pp.2.
6. Ibid pp.3.
7. Ibid
8. Bose A.N, Two Antagonistic Perspectives for Rural Development in India,in Bhowmik K.L.(ed), Rural Development, Inter-India Publications, New Delhi, 1988. pp.23.
9. Ibid pp.27.
10. Ibid pp.29-30.
11. Ibid pp.42.
12. Breman J & Mundle S (ed). Rural Transformation in Asia, Oxford University Press, New Delhi, 1991. pp.(introduction) ix.

13. Ibid pp.x.
14. Ibid
15. Ibid
16. Ibid
17. Bharadwaj K, Alternatives Analytical Paradigms in Theories of Development,in Breman J & Mundle S (ed),Rural Transformation in Asia,Oxford University Press,New Delhi,1991,pp.80
18. Ibid pp.92.
19. Binswanger H, Attitudes Towards Risk: Theoretical Implications of an Experiment in Rural India, Economic Journal,91,867-890.
20. Ibid pp.86.
21. Ibid
22. Byres T.J, The Agrarian Question and Differing Forms of Capitalist Agrarian Transition : An Eassy with reference to Asia,in Breman J & Mundle S (ed), Rural Transformation in Asia, Oxford University Press, New Delhi, 1991.pp.12.
23. Ibid
24. Thorner D, Long-Term Trends of Output in India,in Kuznets,Moore & Spengler (eds) : Economic Growth : Brazil,India,Japan,Durham,North Carolina (1955),pp.124.
25. Marx Karl, Capital vol.3, Progress Publisher, Moscow,1962,pp.328.
26. Lipton M, Agriculture,Rural People,The State and Surplus in Some Asian Countries: Thoughts on some Implications of Three Recent Approaches in Social Science,in Breman J & Mundle S(ed), Rural Transformation in Asia, Oxford University Press, New Delhi,1991.pp.95.
27. Ibid
28. Ibid pp.96.
29. Wade R, The System of Political and Administrative Corruption: Canal Irrigation in South India, Journal of Development Studies, vol 18,no.3,1982.
30. Lipton, op.cit. pp.102.
31. Bardhan P, Marxist Ideas in Development Economics: An Evaluation, in Roemer J (ed) - Analytical Marxism, Cambridge, 1985.
32. Lipton, op.cit. pp.104.
33. Mishra M.S. & Chaudhuri K.K, Management of Rural Development : Some Aspects,in Mishra,M.S.(ed): Rural Development Action and Management, Publications Division,IIM,Calcutta,1981.pp.253.
34. Islam R, Off-Farm Employment in the Development of Rural Asia: Issues and Evidence,Table 1.1 in Shand R.T. (ed): Off-Farm Employment in the Development of Rural Asia,ANU, National Centre for Development Studies, Canberra,1986.
35. Harris J, Agriculture/Non-agriculture Linkages and the Diversification of Rural Economic Activity: A South Indian Case Study,in Breman J & Mundle S(ed),Rural Transformation in Asia, Oxford University Press, New Delhi, 1991. pp.432
36. Ibid pp.442.
37. Saith A, Asian Rural Industrialisation Context,Features,Strategies,in Breman J & Mundle S (ed), Rural Transformation in Asia, Oxford University Press, New Delhi, 1991.pp.458.
38. Ibid pp.459.
39. Acharya S, The Productivity Criterion of Unemployment, Development and Change,vol 14,no.1,1983.
40. Op.cit. Saith, pp.483.
41. Op.cit. Saith, pp.483.
42. Op.cit. Saith, pp.484-485.
43. Op.cit. Saith, pp.487.
44. Op.cit. Saith, pp.487.
45. Bhowmik K.L.(ed), Rural Development, Inter-India Publications, New Delhi, 1988.
46. Chattopadhyay B., The Rural Poor's Access to Food with Particular Reference to Eastern India - An Overview,in Mishra S Madhu: Rural Development in Eastern and North Eastern India, Publications Division,IIM, Calcutta, 1988.pp.89,
47. Ibid pp.90-91.
48. Bray F, Rice Economies: The Rise and Fall of China's Communes in East Asian Perspective,in Breman J & Mundle S (ed),Rural Transformation in Asia,Oxford University Press,New Delhi, 1991.pp.195.
49. Ibid pp.196.
50. Ibid pp.203.
51. Schendel W.V, Rural Transformation in Asia: Models and the Interpretation of Local Change,in Breman J & Mundle S (ed), Rural Transformation in Asia, Oxford University Press, New Delhi, 1991.pp.296-300.

52. Patnaik U, Ascertaining the Economic Characteristics of Peasant Classes-in-Themselves in Rural India: A Methodological and Empirical Exercise,in Breman J & Mundle S (ed), Rural Transformation in Asia, Oxford University Press, New Delhi, 1991.pp.403.
53. Ibid pp.408.
54. Mitra B.N, On Rural Development in Cooch Behar District, West Bengal, in Bhowmik K.L.(ed), Rural Development, Inter-India Publications, New Delhi, 1988.pp.121.
55. Ray G.L. & Bora S.P., Management for Marginal Farmers,in Mishra S.Madhu: Rural Development in Eastern and North Eastern India, Publications Division,IIM, Calcutta, 1988.pp.417.
56. Hazlewood A. & Livingstone I, Irrigation Economics in Poor Countries, Pergamon Press Ltd. Oxford, England, 1982, pp.18.
57. Withers B & Vipond S, Irrigation Design and Practice, Cornell University Press, Ithaca, New York, U.S.A.,1980, pp.24.
58. Israelsen O.W. & Hansen V.E, Irrigation Principles and Practices,John Wiley & Sons,Inc., New York, 1962, pp.266.
59. Dhawan B.D, Irrigation in India's Agricultural Development: Productivity, Stability, Equity ; Sage Publications India Pvt. Ltd., New Delhi, 1988.
60. Dhawan B.D, Irrigation in Kerala, Economic & Political Weekly, December 10, 1988, pp.2659.
61. Ibid
62. Dhawan B.D, Impact of Irrigation on Farm Economy in High Rainfall Areas:The Kal Project, Economic & Political Weekly,December 24-31,1988, pp.173.
63. Hiremath K.C, Rapporteur's Report on Socio-economic Impact of Irrigation Projects, Indian Journal of Agricultural Economics,vol.XXXIX,no.3, July-September, 1984. pp.553-565.
64. Sidhu D.S,Chand R. & Kaul J.K, An Economic Analysis of Various Sources of Irrigation in Punjab, Indian Journal of Agricultural Economics, vol.XXXIX,no.3, July-September, 1984. pp.508.
65. Ibid pp.510-511.
66. Hiremath K.C, op.cit. pp.559.
67. e.g. Revelle (1976), Pandya (1981) etc.
68. Moulik et al.(1990), pp.176.
69. Gadgil D.R,Economic Effects of Irrigation,Ghokale Institute of Politics & Economics,Poona,1948,pp.19-20.
70. Sangal S.P, Pricing of Irrigation Water in India,Economic & Political Weekly,November 16,1991,pp.2646.
71. Shah Tushaar, Water Markets and Irrigation Development in India, Indian Journal of Agricultural Economics, July-September,1991,pp.343.
72. Vaidhyanathan A, Labour Use in Rural India - A Study of Spatial and Temporal Variations, Economic & Political Weekly, December 27, 1986, vol.XXI,no.52, pp.A:130.
73. Ibid pp.A:131.
74. Ibid pp.A:133.
75. Kurian N.J, Employment Potential in Rural India: An Analysis,Economic & Political Weekly, December 29, 1990, vol.XXV,no.52, pp.A:178.
76. Ibid pp.A:183.
77. Palmer-Jones R.W, Sustaining Serendipity ? Groundwater Irrigation,Growth of Agricultural Production, and Poverty in Bangladesh, Economic & Political Weekly, September 26, 1992,vol.XXVII,no.39,pp.A:128.
78. Ibid pp.A:131.
79. National Council of Applied Economic Research, Domestic Fuels in Rural India, NCAER, New Delhi, 1965.
80. Report of the Fuel Policy Committee (FPC), Controller of Publications, New Delhi, 1975.
81. Parikh K, Second India Studies: Energy, Macmillan,Delhi, 1976.
82. Pachauri R.K, Energy and Economic Development in India, Praeger Publishers, U.S.A.,1977, pp.112.
83. FPC op.cit.
84. Pachauri R.K, op.cit.
85. Pachauri R.K, op.cit. pp.163.
86. Venkataraman K, Power Development in India, Wiley Eastern Private Ltd., New Delhi, 1972, pp.67.
87. Ibid pp.16.
88. Thaha A.L, An Evaluation of Four Rural Electrification Projects in Andhra Pradesh, NICD, Rajendranagar, Hyderabad, 1976.

CHAPTER II

THE ELECTRICITY SECTOR : SPATIAL & TEMPORAL DEVELOPMENTS

2.1 Power : An Introduction

Energy development has become one of the mainstays of modern economic development processes, primarily because of the consumptive demands placed by 20th century technology. Growing demand for energy is an indicator of the quickening pace of development for which the energy sector is an important infrastructural constituent. Among the many economic indicators used in making international comparisons of the state of economic development in various countries is energy consumption per capita. Percentage average annual energy growth rates for commercial energy in India have increased from 5.6% (1965-80) to 8.1% (1980-87) for energy production and 5.8% (1965-80) to 6.0% (1980-87) for energy consumption. Energy consumption per capita (in kilogrammes of oil-equivalent) has more than doubled from 100 (1965) to 208 (1987). Along with this is seen a rise in energy inputs as a percentage of merchandise imports from 8% (1965) to 17% (1987).[1]

Comparison may be made with OECD countries such as the United States with 0.4% growth in energy production (1980-87) and 0.1% growth in energy consumption (1980-87), but a per capita energy consumption of 7265 kilogrammes of oil-equivalent. For the same time period, the respective rates for OECD members as a whole were 1.8%, 0.5% & 6573 kilogrammes in oil-equivalent.[2] The figures place India in perspective. The wholly developed countries have low percentage growth rates in energy production and consumption, but per capita energy consumption levels that are more than 35 times that of India. Even compared to other low-income economies, India shows per capita energy consumption much below their average 1987 figures of 297 kg, and below the middle-income economies which have an average of 1077 kg.[3] The growing level of energy imports in India is an indicator of the magnitude of its oil-dependence and of petroleum imports in a world scenario of rising petroleum prices.

Energy contributes to the economy in two ways: as an essential input for economic development and as a contributor to improving the quality of life. In India commercial energy accounts for only "a little over half the total energy used in the country, the rest coming from non-commercial resources, such as cowdung, fuelwood and agricultural waste".[4] These sources are renewable in nature but are still used in a primitive and inefficient way. "The indiscriminate use of non-commercial energy sources is leading to an energy crisis in rural areas. The latest Five Year Plan lays emphasis on the development and accelerated utilisation of renewable energy sources in rural and urban areas. A major policy of the Government is directed towards increasing the use of coal in households and of electricity in transport sector in order to reduce dependence on oil, which is becoming scarce gradually".[5]

However, usage of electricity has considerably expanded over the years with per capita figures of 14.1 kwh (kilowatt-hours) for domestic purposes and 73.4 kwh for industrial purposes in 1980-81, for the country as a whole.[6] Statewise break-up thereof is available below.

Table 2.1

All-India and Statewise Domestic & Industrial Per Capita Consumption of Electricity (kwh) (1980-81)

State	Domestic Consumption of Electricity Per Capita	Industrial Consumption of Electricity Per Capita
Andhra Pradesh	10.3	55.5
Assam	3.0	20.4
Bihar	1.8	38.4
Gujarat	19.9	142.6
Haryana	17.7	94.9
Himachal Pradesh	15.5	24.7
Jammu & Kashmir	14.5	21.6
Karnataka	18.8	108.4
Kerala	19.5	72.5
Madhya Pradesh	6.7	64.1
Maharashtra	28.4	129.6
Manipur	4.6	0.7
Meghalaya	8.5	11.0
Nagaland	7.9	1.2
Orissa	4.3	79.8
Punjab	29.8	141.3
Rajasthan	6.5	37.9
Sikkim	19.0	7.9
Tamil Nadu	18.1	92.4
Tripura	6.6	2.2
Uttar Pradesh	7.2	32.7
West Bengal	14.4	69.4
India	14.1	73.4

Source: The Economic Times' Statistical Survey of the Indian Economy,1984, Hannan Ezekiel(ed),pp.212-213.

Considering domestic consumption alone, large inter-state variation is noticed, with agrarian low-industry states showing very small quantum of consumption. More industrial states generally have high domestic consumption, probably because industry coincides with a higher rate of urbanisation. The observed pattern therefore indicates that regions of the country that are largely dependent on agriculture consume less electricity, although the lower consumption figures are probably the result of a lack of transmission facilities rather than lack of demand.

THE NATIONAL SCENE

2.2 Organisation

With power as a subject in the Concurrent List of the Constitution organisational responsibilities vest with the Department of Power under the Ministry of Energy at the centre, and the State Electricity Boards in the States. The Department formulates policies, makes perspective plans and monitors project-planning and execution and various features thereof, in addition to administering legislation such as the Electricity (Supply) Act 1948,Indian Electricity Act,1910,

etc. which relate to generation, transmission and distribution of power. The Central Electric Authority (CEA) constituted under the 1948 Act is responsible for development of a National Power Policy and for coordination of the activities of various agencies and the State Electricity Boards. The "Central Electricity Authority advises the Department of Power on technical, financial and economic matters. The construction and operation of generation & transmission projects in the Central sector are entrusted to the Central power corporations, namely, the National Thermal Power Corporation (NTPC), the National Hydro-Electric Power Corporation (NHPC) and the North-Eastern Electric Power Corporation (NEEPCO), under the administrative control of the Department of Power. The Damodar Valley Corporation (DVC) constituted under the DVC Act, 1948 and the Bhakra-Beas Management Board (BBMB) constituted under Punjab Reorganisation Act, 1966, are also under the administrative control of the Department of Power. In addition, the Department administers the Beas Construction Board (BCB) and the National Projects Construction Corporation (NPCC) which are construction agencies and the training and research organisations, the Central Power Research Institute (CPRI) and the Power Engineers Training Society (PETS). Programmes of rural electrification are within the purview of the Rural Electrification Corporation (REC), which is a financing agency".[7]

With increasing annual electricity consumption, there has been concomitant expansion of transmission & distribution (T&D) facilities. "The total length of transmission lines of 66 KV and above increased from 10000 ckt (circuit) kilometres in December 1950 to 1.80 lakhs ckt kilometres in March, 1988. The highest transmission voltage in the country at present is 400kv and about 14000 ckt kilometres of 400kv lines have been constructed upto March 1988 and about 13000 ckt kilometres of these are in actual operation. Fairly well inter-connected systems at voltage of 220kv with progressive overlay of 400kv are presently available in all the regions of the country except the North-Eastern Region.With the creation of two generation corporations, namely, National Thermal Power Corporation and National Hydro-Electric Power Corporation in 1975, the Centre has started playing an increasingly larger role in the development of the grid systems".[8]

Regional Electricity Boards were set up in 1964 to promote integrated operation of regional power systems in the Northern Region covering the States of Punjab, Haryana, Rajasthan, Uttar Pradesh, Jammu & Kashmir, Himachal Pradesh and Delhi (Union Teritory); the Western Region covering Maharashtra, Gujarat, Madhya Pradesh and Goa; the Southern region covering Tamil Nadu, Kerala, Andhra Pradesh, Karnataka and Pondicherry; the Eastern Region covering the States of West Bengal,Orissa,Bihar; and the North-Eastern Region covering Assam, Meghalaya, Tripura, Nagaland, Manipur, Mizoram and Arunachal Pradesh. "In order to coordinate the operation of the regional grids of the constituent power systems and to optimise utilisation of the existing generation capacity, Regional Load Despatch Centres (RLDCs) have been set up in each region which function under the regional electricity boards. The Central Electricity Authority extends overall supervision over the RLDCs".[9] These have been commissioned in 1984 in the Western and the Northern regions, and 1986 in the Eastern Region. State Electricity Boards have been established in 18 out of 25 States, except for Arunachal Pradesh, Goa,Manipur, Mizoram, Nagaland, Sikkim and Tripura. The West Bengal State Electricity Board was constituted in 1955 under section 5 of the Electricity (Supply) Act,1948, and is responsible for generation and distribution of electricity within the State.

It can thus be seen that with augmented power demand the Central sector has come to the fore, to an extent not envisaged in 1948. This has been through the incorporation of the public-sector NTPC & NHPC in 1975 with the objective of planning, promoting and organising the integrated development of thermal and hydel power,respectively, in the country. The NTPC is entrusted with the task of execution and operation of large pithead thermal power stations such as Rihand, Singrauli and Vindhyachal etc. and their associated transmission networks. The NHPC is presently engaged in the construction of "Uri and Dulhasti (both in Jammu & Kashmir), Chamera (H.P.), and Tanakpur (U.P.). NHPC is also responsible for the operation and the maintenance of Baira Siul Hydro-Electric Project(Himachal Pradesh),the Salal power station(Jammu & Kashmir)and Loktak Hydro-Electric Project(Manipur)".[10] Construction assistance to both Central & State power agencies is provided by the National Projects Construction Corporation (NPCC).

As such most of the generation facilities owned by private companies were nationalised in the 50s but three privately-owned utilities still serve major cities: the Calcutta Electric Supply Corporation (CESC) serves Calcutta and the Tata Power Company serves Bombay and Ahmedabad, all more competently than the neighbouring State Electricity Boards.

2.3 Generation & Consumption

Electricity as a source of energy has the advantages of convenience and versatility and electricity demand has therefore grown at a rate much faster than that for other sources. As a result the power industry "has recorded a phenomenal rate of growth both in terms of its volume and technological sophistication over the last few decades. Electricity plays a crucial role in both industrial and agricultural sectors, and therefore, the consumption of electricity in the country is an indicator of productivity and growth. In view of this, power development has been given high priority in the development programme".[11]

As a result capacity utilisation in electrical industries have been at high percentage levels of 56% to 90%. Generation capacities have been utilised at levels between 43% to 50% with a tendency to grow over time between 1970 to 1984.[12] Indices of industrial production reached levels of 202.6 for electrical machinery and 245.7 for electricity generated, with 1970 as base-year.[13] Percentage growth rates in electric generation were at high levels of 12% between 1983 and 1984 and 8.5% between 1984 and 1985.[14]

The principal sources of electric generation in the country are thermal, hydel and nuclear, in order of importance. Of these, hydro-electric generation is chronologically the oldest with the first hydel power station in Asia being set up at Rinchintong in the Darjeeling hills in 1897, a mere ten years after the first such station in the world had come into existence in Britain. Power generation however grew mainly through thermal technologies till independence, the rationale behind this being drawn from the country's large balance of coal resources. "The world-wide shift from coal to oil after World War II went less far in India than in most other countries: neither the domestic oil reserves nor the foreign exchange earnings could support the extensive replacement of coal by oil".[15]

In later years there has been some increase through oil-based generation, both from the establishment of utility power plants near oil refineries so that their fuel oil surpluses could be used, and from the growth of captive diesel-powered generation in industry. Growth of the former has been apace with growth of refining capacity whereas growth of the latter is the result of the need for emergency generation in face of the inability of grid-generated power to cater to peak electricity demand. Inspite of this, dependence on coal-fired capacity has grown from 56.5% in 1974 to 58.7% in 1981,[16] mainly because of the balance of payments considerations involved in expanding oil-fired thermal generation.

Indian hydro-electric resources are fairly substantial although not evenly distributed geographically; a rough estimate in 1965 placed them at 50 GW (giga watts) at 60% load factor.[17] The latest CEA estimate is 84 GW at 60% L.F., which is said to be 2.9% of the world's potential.[18] Most of this potential is located in the mountain ranges of the Himalayas and the Eastern & Western Ghats, in proportion to the distribution of monsoon rainfall. Highest rainfall is at the points of entry of the south-west and south-east monsoons in the Southern peninsula tip, and the Eastern Himalayas, respectively. Since this is distributed well away from coal resources, it is ideally placed to supplement thermal generation. Studies by the Power Commission in 1962 and the Energy Survey of India Committee in 1965 recommended greater reliance on hydro-electric generation on grounds of its cheapness and its being a renewable energy resource. The Power Economy Committee (1971) recommended that the bulk of new generation capacity in the Fifth & Sixth Plans should derive from expanded hydel generation with the balance of this capacity being drawn from super-thermal power stations(STPS) implying the largest possible unit sizes and located at coal washeries and the pitheads of coal mines.

The third major source of electricity is nuclear generation comprising 2.6% of installed power capacity and 2.4% of total generation in 1984-85.[19] Nuclear power is recommended as the economic option for regions in Western & Southern India that lack significant hydel potential and where transportation of coal from mines involves long journey leads. Although enthusiasm for this technology has been dampened in the recent years because of the problems of refuelling and environmental considerations, the nuclear power option is still the only viable power resource in these regions. Nevertheless the growth of capacity has been slow and with construction lags and long gestation in installing hydel capacity, there has accordingly been great pressure on coal-fired capacity.

Generation figures within these three major constituents of the power industry, by source and by region are provided in the Table 2.2. The dominance of thermal generation in the all-India context is immediately apparent, with a nearly three-fold increase between 1975-76 and 1989-90. Hydel power shows a fall in proportion, despite plan emphases earlier alluded to; a number of hydel projects whose construction was initiated have yet to come on stream. Inter-regional variations by source are also visible: the South has the best inter-source generation, thermal dependence is heaviest in the West and high in the East. Hydel generation is highest in the North, and nuclear generation entirely absent in the East and North-East. Growth in generation has been between 7-10 percent between 1985-86 and 1988-89; of these thermal generation grew by high rates of nearly 15% except in the last-mentioned year and hydro-generation showed negative growth in 1985-86 and 1987-88.[20] Consumption figures for 1981, by region,

available in the National Power Plan, 1983,[21] indicate electricity consumption of 23229 GWh (Northern Region), 28259 GWh (Western Region), 24340 GWh(Southern Region),13509 GWh(Eastern Region), 908 GWh (North-Eastern Region) and 7932 GWh from power produced under captive generation.

Table 2.2

Generation of Electricity By Source & Region in India

(Figures in GWH)

	1975-76	1980-81	1985-86	1988-89
I. Thermal (includes Steam & Gas)				
Northern	9838	13691	25721	40493
Western	14295	25368	48934	64136
Sourhern	6557	9218	20445	30522
Eastern	12136	12529	18368	21232
North-Eastern	476	496	868	1127
All India	43302	61301	114336	157510
II. Hydro				
Northern	10110	15080	19478	23749
Western	6439	7812	6178	7328
Sourhern	13639	20283	21119	21809
Eastern	2932	2962	3174	3584
North-Eastern	182	406	1035	1323
All India	33302	46542	50984	57793
III. Nuclear				
Northern	533	1228	1283	1871
Western	2094	1774	1960	1900
Sourhern	-	-	1739	2051
All India	2627	3001	4982	5822
IV. Utilities All India(I thru III)	79231	110844	170302	-
V. Self-Generation in Industry & Railway	6695	8417	13365	-
VI. Total ALL India (IV & V)	85926	119261	183667	-

Source : Compiled from World Bank Country Study : India ,1989, Table nos.8 & 9,pp.303, and S.Rajgopal: Power Scenario - A Performance Review, Indian Journal of Power & River Valley Development,December 1989,pp.295.

Another point of interest is sectoral demand for electricity, an idea of which may be had by examining figures for sectoral electricity consumption.

Table 2.3

Consumption of Electricity by Sectors
(figures in GWh)

	1975-76	1980-81	1985-86
Mining & Manufacturing	43.46	55.35	n.a.
Transport	1.89	2.31	3.17
Domestic	5.82	9.25	17.11
Agriculture	8.72	14.49	23.53
Others	6.28	8.30	12.71
Total	66.17	89.70	n.a.

Source : Compiled from World Bank Country Study: India 1989, Table nos.8 & 10, pp.304.

The table shows that consumption in all sectors has been growing, with mining & manufacturing being dominant consumers. Growth in transport consumption is mainly the result of progressive electrification of railway running-track. Sectoral demands from domestic, agricultural and other consumers has also grown. However analysis of average compound growth rate of consumption (i.e. percentage growth per annum) reveals a rate between 4-9 percent for mining & manufacturing, 2-8 percent for transport and high rates of between 10-15 percent for domestic consumption and 5-17 percent for agricultural consumption. This is against average growth in total consumption by 5-9 percent. Analysis brings out the growing importance of electricity as a quality-of-life determinant through domestic consumption, although this is largely confined to the urban population segment, and the response of agriculture to technological thrusts in irrigation under Accelerated Foodgrain Production Programmes and the green revolution.

Overall growth in the power sector over the plan period can be assessed from the table below. The massive thrust in rural electrification through village electrification and pump energisation is evident in their C.G.F. Although installed capacity and generation have also increased significantly, burgeoning population has limited growth in per capita consumption. Installed generating capacity is expected to increase to 103000 MW over the Eighth Plan period of which 78% of capacity addition will be thermal, 19.4% hydel and 1.8% nuclear.[22]

Table 2.4

Growth of Power Sector in the Plan Period

	1950	1989	Position in 1989-90	C.G.F	Annual Growth(%)
Installed Capacity(MW)	1700	64729	64729	38	9.72
Annual Energy Generation(GWH)	5100	244971	244971	48	10.37
Villages Electrified(lakhs)	0.03	4.7	4.7	154	13.69
Pumpsets Energised(lakhs)	0.21	82.8	82.8	394	16.45
No. of Connections(lakhs)	15	650	650	43	10.08
Per Capita Consumption(kwh)	15	225	225	15	7.14

*Cumulative Growth Factor (CGF) = 1990 value/1950 value

Source : Compiled from Table in R.K.Narayan:'Power Development in India - Problems & Prospects',Indian Journal of Power & River Valley Development, December, 1990.pp.395.

However,"most regions of India experience power shortages in most years .... the shortages are not perennial; for instance, they are less frequent after the monsoon, in August-December, when the rivers are full and hydro-electric generation is at its peak. Nor are they endemic, for some parts of the system - e.g., some cities and essential industries - are protected from shortages, whilst other parts - e.g. agriculture - bear the brunt of the shortages".[23] The shortages are symptomatic of generation chasing fast-increasing demand but never catching up with it. An indication of increasing demand is given by the GDP-elasticity of electricity consumption which was 2.27 between 1970-79, considerably higher than industrial countries, or LDCs like Brazil with 1.21 and Mexico, with 1.53 between 1970-79.[24] Weakness in power availability impedes industrial growth despite rapid growth of generation system. Thus a large and satistfied demand exists. Estimates of current total deficit range between 6% & 10% and peaking power deficits as high as 30% are estimated for the Northern Region. Planned rationing and unplanned cuts, commonly called "load-shedding", have to be resorted to and the quality of power supply is poor in terms of voltage & frquency. Captive generation in the manufacturing sector is over 15% of its total power consumption and continues to rise even though the cost of generation can easily be twice that of grid power.[25]

2.4 Critical Review

The need for massive thermal generation to cope with rising electricity demand, which resulted in the establishment of super-thermal power stations in the Central sector, arose because of technological obsolescence in the older coal mines and transport bottlenecks. However, the setting up of large pithead thermal stations with the objective of bypassing both older mines and railways has not been without pitfalls. Although the SEBs dominate the power system, generating and distributing nearly 70%[26] of the output, and are entrusted with the extension of the grid to rural areas, the 1973 decision to operate large pithead stations in the Central sector put them under considerable strain; "they had to buy electricity from the pithead stations and distribute it, they had to set up high-voltage transmission networks, and they had to participate in complex arrangements for sharing power among states. All these arrangements became matters of fierce political bargaining between the Central and the State governments",[27] particularly over payments to be made to the Central sector and their realisation from SEBs.

"This interminable bargaining over an indeterminate price is due to the bilateral monopoly in which NTPC and the SEBs find themselves inextricably tied. NTPC can not undertake distribution of power and therefore has to sell it to SEBs; the SEBs, on the other hand, are refused permission to build new plants by the central government and can get power only from NTPC. Neither can do without the other".[28] Resolution of the conflict "could take the form of delivery power to the consumer without squabbling over the cost i.e. regardless of cost. If it took that form, NTPC would become as loss-ridden and as dependent on the Central and State governments as the SEBs are today. NTPC has removed the twin constraints on power development set by the limited coal transport capacity on the one hand and the limited maximum size of power plant that can be absorbed by the SEBs on the other; but it is powerless to carry out the implications of large-scale generation for distribution to the consumer. Whether NTPC will succumb to the outdated organisational structure, or whether it will create the imbalance that topples the structure, remains an increasing subject for speculation".[29]

Furthermore, the over-dependence on coal-fired generation concomitant on installation of pithead stations "has further distorted the hydro-thermal mix in all the regional power grids which for optimal energy utilisation should be in the ratio of 40:60. The hydro-thermal mix will be of the order of 32:68 by the end of the Seventh Five Year Plan and will further go down to 28:72 by the end of Eighth Five Year Plan. Regionwise hydro-thermal mix will, by the end of Eighth Five Year Plan, be as follows":[30]

Northern Region	28:72
Western Region	16:84
Southern Region	42:58
Eastern Region	15:85

Source :R.K.Narayan,'Power Development in India - Problems & Prospects', Indian Journal of Power & River Valley Development, December, 1990.pp.395.

Other disturbing features are low plant load factor (PLF) and transmission & distribution (T&D) losses. All-India average PLF for 1989-90 was 56.5% as against 68% for NTPC plants; "some of the SEBs

are operated as low as 35%".[31] The World Bank Report on India, Power Sector Efficiency Review (1989) comments that 10-15 percent capacity gain could be economically obtained by efficiency improvement. Average T&D losses in India are of the order of 22-23 percent as against 7-8 percent or less in developed countries.[32] These comprise technical losses (from low-voltage, transmission networks) as well as actual pilferages. With the SEBs having to bear the brunt of fluctuating power demands within an extensive distribution network catering to large numbers of low-voltage consumers, much of the commercial losses on this account have also to be borne by them.

2.5 Transmission & Distribution

With the growth of generation in the Central sector and increase in unit-size to the present 500 MW unit in operation at NTPC super-thermal installations, substantial sophistication has entered into the transmission network. The National Power Plan envisages integration of all subsystems into regional power grids, closer integration of which is to lead to evolution of the national power grid. Salient features of transmission network established by the regional grids can be assessed from the overhead power map of India. The regional grids have EHV (extra high voltage) lines of 220KV (kilovolts) and 400KV, the latter of which is the maximum transmission voltage at present. These lines facilitate exchanges of power between the States and the regions and are in the Central sector,with construction responsibilities, which were previously assigned to NTPC, NHPC and NEEPCO now having devolved on the newly-constituted National Power Transmission Corporation (NPTC).[33] Besides these, the SEBs maintain HT (high tension) lines of 132KV/66KV which are radial feeds carrying power from major grid substations to HT consumers. These voltages are further stepped down on the 33KV/11KV transmission lines that link the distribution network for low-tension consumers.

For grid integrity, it is necessary that the sub-systems within the power sharing agreement operate at system voltages compatible with the transfer of power. For this, generation scheduling for the region as a whole is necessary through the RLDCs. Under operational conditions however "the existence of generation deficiency in many system, possibility of over-loading tie-lines, low frequency condition prevailing over long periods, opening out of tie-lines by individual systems to break away from the grid"[34] are some of the other problems encountered, which in extreme conditions lead to cascade tripping of units and consequent system shut down.

The five Regional Power Grids facilitate exchange of power from surplus to deficit areas and assist in the optimum utilisation of the power available in the country. Available figures for inter-regional power-transfer in the year 1986-87 serve also to indicate relative surplus-deficit positions in the different regional grids. Total inter-regional exchanges at 2196MU have been increasing from 1671MU (1983-84) and 1849MU (1984-85), thus indicating efficiency of the grid system. Taking ratios of outward to inward power-transfers it is seen that whereas Western and Northern Regions are in a generally surplus position with ratios of 7.71 and 1.56, respectively, the Southern and Eastern Regions are generally deficit with respective ratios at 0.09 and 0.01. However, volume of transfer is higher for Eastern Region, which is only to be expected from earlier figures and low consumption demand in the latter. The North-Eastern Region still remains an island within the grid with power transfers at nil. This can be seen from the data on inter-system power-exchange tabulated below.

Table 2.5

Inter-Regional Transfers of Power (1986-87)

(million units)

Supplied from	Received by				
	Northern Region	Western Region	Southern Region	Eastern Region	Total
Northern Region	-	166	-	48	214
Western Region	135	-	1382	341	1858
Southern Region	-	75	-	45	120
Eastern Region	2	-	-	-	2
North-Eastern Region	-	-	-	-	-
Total	137	241	1382	434	2194

Source : Power 1986-87 - A Status Report (Extracts from the Report of the Department of Power, Ministry of Energy, Government of India), Indian Journal of Power & River Valley Development, October 1987,pp.277.

2.6 Rural Electrification

From the sectoral figures and inter-state figures on power consumption, previously reproduced in Table 2.1 the role of agricultural demand as a hidden player in the electricity scenario can be surmised. Since the same transmission networks cater to domestic, industrial and agricultural demand, states with higher per capita consumption generally record higher agricultural consumption too. The occasional exception to this rule is however found in states like West Bengal where the urban and industrial concentration is localised around a mega-city i.e. Calcutta, leading to wide ranging internal differentials between districts.

The rural electrification (RE) programme was initiated in the early 1950s as part of the normal activities of the SEBs, though emphasis then was "mainly on village electrification rather than energisation of pumpsets".[35] Until the late 60s progress was haphazard and unrelated to criteria of economic development or financial viability. Financial constraints on SEBs further militated against any significant achievements in the programme. The All-India Rural Credit Review Committee constituted under the Reserve Bank in its report[36] recommended an accelerated programme for rural electrification, and in view of the resource crunch confronting the SEBs, recommended creation of a special national fund for an autonomous agency to administer the rural electrification programme. This was accepted during the Fourth Plan and the Rural Electrification Corporation (REC) was constituted, under the overall control of the Ministry of Energy, in July 1979.[37] The philosophy behind its establishment was to bring rural electrification within a project-based development approach comprising:

"a. modernisation of agriculture through water resources;
b. promotion of agro-based industries;
c. decentralisation of non-farm occupations through mechanisation of household industries; and

d. bringing in, directly or indirectly, other services in the form of amenities such as electrification of houses, educational institutions and health centres, energisation of pumps for drinking water, street-lighting, etc."[38]

The REC provides finance to SEBs for rural transmission networks, on conditions of financial viability, and ensures dovetailing of rural electrification projects with technological initiatives like pumpset energisation, with the participation of the Agricultural Refinance & Development Corporation (ARDC) and the commercial banks and State rural development agencies. REC programmes currently underway include the Minimum Needs Programmes (MNP) and Special Projects Agriculture (SPA), besides its normal loan programmes. Recent projects targeted towards energy efficiency come under Conservation of Energy: Network (CEN) and Conservation of Energy: Pumpsets (CEP) projects. Total financial assistance in 1987-88 amounted to Rs. 1027.87 crores.

Table 2.6

All-India Figures for Rural Electrification
(1977-78 to 1987-88)
(Figures in Thousand)

Year	Villages Electrified		Pumpsets Energised		REC-Sanctioned Financial Assistance
	Annual	Cumulative	Annual	Cumulative	(Rs.in Crores)
1977-78	9.85	49.81	8.80	318.97	145.14
1981-82	19.57	91.37	194.82	752.88	209.20
1984-85	19.04	171.62	335.22	1798.29	514.90
1987-88	20.36	230.86	543.10	3145.51	1027.87

Source : Annual Report, 1987-88, Rural Electric Corporation,pp.6.

Achievements under rural electrification are normally quantified in terms of number of villages electrified and pumpsets energised, figures for which, spanning 15 years, are tabulated above. The table indicates annual performance and gross achievements of the RE programme. Increasing figures for villages electrified and pumpsets energised emphasise the importance attached to RE after the Fourth Plan. Starting with a percentage figure of villages electrified which was as low as 0.54%, during the period uptil commencement of Fourth Plan in 1969, the figure rises to 12.94%. Corresponding figures for subsequent periods are 27.5% (Fourth Plan-end), 43.88%[39] (Fifth Plan-end), 64.02%[40] (Sixth Plan-end) and approximately 81.03%[41] (Seventh Plan-end).

However consideration of ratios of annual-to-cumulative figures in the table for both villages electrified and pumpsets energised points to thrust and consolidation in the village-electrification programme in the ten-year period upto 1981-82, and a thrust in the pumpset energisation programme in the five-year period between 1977-78 and 1981-82; the initial impetus seems to have worn off thereafter. Examination of 1980 inter-state figures on villages electrified as mentioned in the REC bulletin reveals that states recording highest percentage electrification such as Haryana, Kerala and Karnataka (all 100%)[42] also show appreciably high consumption figures in Table 2.1. Because of the slowdown in village electrification thereafter, states that had lagged behind in the initial phase will not have made sufficient headway over the subsequent decade, because of the slowdown

as also smaller increments in REC assistance. In a state like West Bengal which had 34.9%[43] village electrification in 1980,the 1990 figure is 69.4%,[44] symptomatic of the deceleration of the RE programme in its later phases.

As to the reason for the slowdown, the REC Chairman's Report states that "the villages now being taken up for electrification are more disadvantageously located than those taken up earlier",[45] which does not afford satisfactory explanation of why the consequent RE programme should be subject to inter-state variation. The true reason might lie elsewhere. RE projects, in general, are a losing proposition and, for long periods, the revenues they generate can hardly meet the liabilities of operation, maintenance, and financial charges. Nevertheless, even though they are uneconomical for the SEBs, they constitute an important means of fulfilling socio-economic objectives in rural development. Since REC sanctions are tied to financial viability of projects, there is low offtake, especially from SEBs within the power-deficit Eastern grid.

"Long distribution lines, low load density, poor load factors and poor power factor are some of the causes which make RE a bad financial proposition."[46] "Losses in rural distribution system pose a serious challenge to the SEBs. The energy losses which occured in the rural distribution systems are as high as 25-30 percent in parts of the country."[47] "Various studies have revealed that most of the losses in the distribution system of the rural electrification are in the LT network. In certain cases their losses were found to be as high as 25-30 percent of the energy supplied".[48]

Another set of problems pertains to the nature of the agricultural power demand, which is seasonal. "Because of the characteristic load pattern of the irrigation pumpsets, the system having a large proportion of agricultural load may have a serious problem in meeting the peak demand of the system".[49] Pumpsets are generally not worked during the monsoon when hydel generation capabilities are higher. At other times, the pumping load is concentrated during the day, leading to peaking of system demand that is often beyond transmission capabilities of the SEBs. Load-factors for the agricultural load are low and seasonal and "for the rest of the year, the transmitters consume power without a load to transmit"[50] resulting in the high T&D losses of the rural network. As against this,it is widely recognised that investment in the RE sector brings manifold returns in the form of increased agricultural production and agro-industrial activity; thus financial viability of RE projects should be judged not merely from direct investment and returns, but with full cognizance of these benefits.

Much of the debate on the pros and cons of RE centers around its impact on the financial position in the SEBs, with recent arguments being for rationalisation of power tariffs to ensure commercial profits. Following acceleration in the RE programme "the rates of return decline sharply in the seventies owing to the losses incurred on rural electrification. The central government provided finance for the transmission and distribution lines to rural areas, but the recurring costs had to be borne by the SEBs. Most SEBs charge rural communities a fixed sum irrespective of their power consumption. In April 1979 this charge worked out to 12-17 paise per kwh against 33-48 paise for urban consumers of low-tension power; the cost of supplying electricity to rural areas was, of course, much higher. In 1976 the boards earned a net revenue surplus of Rs.450 million, but it was wiped out by losses of Rs.1,568 million on rural electrification".[51]

Efficiency priorities expectedly differ between system-engineers, economists and government. An example is the question of regulation of transmission in a situation of power-shortage, where rural feeders are the first to be disconnected and where agricultural loads are staggered into the night-hours even as industry is supplied by day. Even though the position taken by the power industry is for raising agricultural tariffs to obviate losses on the rural network, in some cases the agricultural tariff is found to be already higher than the industrial tariff.[52] At the same time the range of benefits accruing from RE are much more real and significant than from consumption of equivalent power by industry,[53] even though generation and T&D costs for the latter are lower; hence the RE programme needs to be evaluated on benefit-cost rather than commercial profit lines. As against this are opinions on more commercial lines such as those of the Planning Commission Sub-Group on "Energy Pricing, State Electricity Boards finances and related Issues"[54] which document the imperative of keeping the SEBs financially viable so that they generate internal resources as required under the 1948 Act. "SEBs tariffs and average realisation per unit sold has always lagged behind the average cost of generation and supply. Tariffs for agricultural consumers have been kept at abysmally low levels due to socio-economic considerations while even the tariffs for non-agricultural consumers are lower than the actual cost of generation and supply. This has to be set right".[55]

In reality, with combined operation of Central and State sectors, power problems have compounded. "If a board is making abnormal losses, the central government can deny new loans to its state government unless the board achieves a better balance between revenue and costs. Thus an errant SEB can be 'punished' by the central government by being starved of new plants - though the punishment is in reality borne by consumers. Part of the reason for the slow growth of capacity in eastern India in the seventies and eighties was that construction periods lengthened, and the central government delayed sanctioning new projects. But this type of inducement to efficiency is fitful (and).... has therefore not been very effective in promoting efficiency".[56]

In view of the problems attendant on RE which have been alluded to above, rural electrification in India has often been accused of having degenerated into bureaucratic 'targetism'. In very many states where power deficits exist, it is the urban industrial sector that is accorded priority; however since RE is a part of socio-economic policy-making each administration and electricity authority trots out impressive statistics. It is a moot point whether the poor state of power supply can actually sustain the targets reported to have been achieved.

THE EASTERN REGION

2.7 Grid Features

The Eastern Regional Electricity Board (EREB) provides grid linkage between the State Electricity Boards of Bihar, Orissa and West Bengal i.e. BSEB, OSEB and WBSEB and the other generating agencies of the region, namely, the NHPC, NTPC and the Damodar Valley Corporation (DVC) in the central sector, Durgapur Project Limited (DPL), West Bengal Power Development Corporation Limited (WBPDCL) and the Calcutta Electric Supply Corporation Pvt. Ltd. (CESC). Sikkim, which is yet to have an SEB of its own, is included under the EREB. The three SEBs and

CESC are generating and distributing agencies; the others mainly produce bulk power for transmission and sale. The attached T&D chart shows inter-system linkages for the EREB. Grid-linkage between NTPC and WBSEB is over 400kv EHV S/C (single circuit) lines with another 400kv linkage with OSEB contempleted; between WBSEB and BSEB over 220kv and 132kv S/C EHV lines. DVC is linked to OSEB by 220kv S/C and to BSEB by 132kv D/C (double circuit) and S/C lines. WBSEB is also linked to DVC by 220kv and 132kv lines. Linkage of the Eastern Region with the Northern grid is via the Moghalsarai-Dehri UPSEB-BSEB line and the Rihand-Sonnagar NTPC-BSEB lines.

Table 2.7

Sub-Systemwise Installed Capacity of EREB Constituents (as of 1987)

Board/ Agency	Generating Stations	Installed Capacity (MW)	Stationwise Total
BSEB	Patratu(T),Barauni(T), Muzaffarpur(T),Kosi(H), Subarnarekha(H)	840 + 365 + 220 + 20 + 130	1425(T) + 150(H) = 1575
DVC	Bokaro(T),Bokaro'B'(T), Durgapur(T),Chandrapura(T), Maithon(H),Panchet(H), Tilaiya(H)	247.5 + 210 + 500 + 780 + 60 + 40 + 4	1737.50(T) + 104(H) = 1841.50
OSEB	Talcher I(T),Talcher II(T), Hirakud I(H),Hirakud II(H), Balimala(H),Rengali(H)	250 + 220 + 198 + 72 + 360 + 100	470(T) + 784(H) = 1254
WBSEB	Bandel(T),Santaldih(T), Kolaghat(T),Bouripur(T), Jaldhaka(H),Messanjore(H), Kasba(GT),Haldia(GT), Siliguri(GT)	540 + 480 + 420 + 35 + 35 + 4 + 40 + 40 + 20	1475(T) + 35(H) + 100(GT) = 1610
DPL	DPPS(T)	395	395(T)
CESC	Mulajore(T),New Cossipore(T), Southern(T),Titagarh(T)	625	625(T)
SIKKIM	Gangtok(D), Lower Lagyap(H)	17	1.70(D) + 15.30(H) = 17.00
NTPC	Farakka(T)	400	400(T)
NHPC	Chukha H.E.P. (in Bhutan)	270	270(H)
TOTAL EREB			6529.20(T) + 1358.30(H) 100(GT) = 7987.5

Note: H=Hydel, T=Thermal, GT=Gas Turbine & D=Diesel.

Source: Monthly Progress Report,EREB,CEA,Government of India,Calcutta,April-1987.

Sub-systemwise installed capacity for all constituent subsystems of EREB are tabulated above.

Installed generating capacity in the region as in 1987 was 7717.50 MW[57] with BSEB, OSEB and WBSEB accounting for 1575MW, 1254 MW and 1610 MW, respectively. Hydro-to-thermal ratios for the three SEBs were 0.11(BSEB), 1.67(OSEB) and 0.02(WBSEB); this is against 0.17[58] for the Eastern Region. Of the constituents, WBSEB therefore has the lowest hydro generation component. Actual generation lags behind unrestricted electricity demand over the region, giving rise to a shortage in energy (in MV terms) of 22.94% which varies between constituents at 27.69% (BSEB) 17.26% (OSEB) and 31.55% (WBSEB).[59]

Exchange of power on the EREB grid takes place via the system inter-connections in the T&D chart. The two Central sector agencies NTPC and NHPC are purely generating agencies whereas DVC has a service network of its own covering the core areas of coal, steel and railways. DPL has a industrial network comprising large industrial units in the Durgapur-Asansol region and a small LT network of 262.4 circuit-km (CKM). Data on power transfer between EREB constituents for the quarter November'86 to January'87 is illustrative of the exchanges after NHPC generation via the Chukha Hydel Project in Bhutan had entered the system, and is reproduced below :

Table 2.8

Exchange of Power Between EREB Constituents
(Quarter : November'86 - January'87)

(MW)

From \ To	BSEB	OSEB	WBSEB	DPL	CESC	DVC	TOTAL
BSEB	-	292	-	-	-	305	597
OSEB	126	-	-	-	-	45	171
WBSEB	76	-	-	382	650	570	1878
DPL	-	-	112	-	-	447	559
CESC	-	-	-	-	-	-	-
DVC	345	259	130	-	203	-	937
NTPC	-	-	514	-	-	-	514
NHPC	96	-	398	-	-	-	494
TOTAL	643	551	1154	382	1052	1367	-

Note: OSEB receipts from NALCO & MPEB are included in the OSEB system.

Source: Monthly Progress Report,EREB,CEA,Government of India,Calcutta, April-1987.

Column totals represent imports by constituents and row totals refer to exports. CESC is a gross importer while NHPC/NTPC are gross exporters; other constituents exhibit two-way exchange. Of the EREB constituents the major agencies in grid power exchange are WBSEB and DVC; CESC imports considerably without export. WBSEB exports include 1232MW within the State itself comprising exports to DPL and CESC, leaving a balance 646MW as power exported to BSEB and DVC. Compared to the two other SEBs, the WBSEB exports a larger amount of electricity outside its own command region (although contractually bound to do so in the case of CESC and DPL) than its imports; however a large part of this is accounted for within the State and does not flow into

neighbouring grids. Nevertheless, even after including all exchanges internal to West Bengal within the combined State-system, the position in West Bengal is still the opposite of that of OSEB and BSEB. This is brought out in the following table :

Table 2.9

Power & Energy Exchanges Between EREB Constituents : Import:Export Ratios (Quarter : November'86 to January'87)

Board/ Agency	Power MW : MW	Energy MU : MU
BSEB	1.88	2.3
OSEB	3.22	156.71
WBSEB	0.61	0.83
DPL	0.68	0.22
CESC	∅	(Exp=nil,Imp=422.99)
DVC	1.45	1.72

Source: Monthly Progress Report,EREB,CEA, Government of India,Calcutta, April-1987.

Comparison of the above ratios by Board/Agency reveals similar patterns for both power and energy exchanges. For WBSEB and DPL, the ratios are less than unity indicating that they are net exporters, whereas the other agencies are net importers having import-export ratios greater than unity for both power and energy. CESC is exceptionally so, with imports of 1052MW(power) and 422.99MV(energy), and exports=nil, raising its ratio to infinite levels.

The foregoing analysis brings out the major problems confronting the Eastern Regional grid. The WBSEB is linked via tie-lines to two neighbouring SEBs that are net importers of power without getting back-up support other than from Central Agencies. OSEB and WBSEB, on the other hand, have tie-lines with the Northern grid, and the Southern grid respectively. "At present DVC, DPL-WBSEB and CESC are operating in parallel. Bihar State Electricity Board and Orissa State Electricity Board are not in the inter-connected system in Eastern Region. Bihar State Electricity Board remains with Northern grid most of the time and Orissa State Electricity Board with Andhra Pradesh State Electricity Board for utilising the help they receive from them. This has put great strain on the system management as because the truncated Eastern Region of DVC-WBSEB-CESC-DPL system remains predominantly thermal where standby hot running reserves is extremely difficult to maintain".[60] "With Orissa State Electricity Board remaining out from rest of the agencies the benefit of hydro-thermal mix is lost to both. Inspite of sincere efforts from all participants, it has not yet been possible to bring Orissa State Electricity Board into the Eastern Region integrated operation".[61]

POWER IN WEST BENGAL

2.8 System & Organisation

Of the eight generating agencies that together constitute the Eastern Regional grid four belong to the West Bengal power system. These are, CESC which serves metropolitan Calcutta, DPL which serves the industrial and colliery belt in and around Durgapur-Asansol, the WBSEB which serves the rest of the State, and the DVC which is linked to BSEB and OSEB as well, but specifically meets the power demands of the steel plants, the collieries and the railway industry as also of railway traction in the region. With the transfer and upgradation of the Kolaghat Thermal Power Station (KTPS) from WBSEB another publicly-owned generating agency has been formed in 1987; this is the WBPDCL. Besides there are two small companies such as DPSC (Dishergarh Power Supply Company) which have small generating capacities of their own.

Power generation in West Bengal started with the passing of the Calcutta Electric Lighting Act,1895.[62] The Indian Electric Co. Ltd., incorporated in London, became the licensee in January 1897[63] and later changed its name to Calcutta Electric Supply Corporation Ltd.(CESC) with commercial generation starting in 1899.[64] The company was Indianised in 1971 and is now incorporated in Calcutta.[65]

The CESC now has under it the generating stations mentioned in Table 2.7 in previous section. It caters to a service network spread over 567 sq.km.[66] with a T&D network of 9,990 CKM[67] and its load, besides public utilities, is from domestic, commercial and industrial consumers, with a high percentage bulk load. CESC installed capacity, at 553.5 MW, is less than its system demand and it is presently a net importer of power from the WBSEB/WBPDCL/DPL and DVC systems, accounting for 24.3% of total West Bengal power generation but 46.3%[68] of total sales of energy in 1989-90; it accounts, however, for 46.7% of total industrial sales of energy in the State.

DPL, when set up in 50's as a public undertaking, "was initially conceived as a captive plant of the coke-oven and by-product plants set up the State government; further expansion of the power plant in Durgapur was authorised for power supply to outside the [Damodar] valley",[69] where it is situated. DPL "is responsible for supply of power to all consumers as authorised by DVC"[70] and after meeting local demand at Durgapur, surplus power flows into the WBSEB system at Bandel, even though the original intent in setting up DPL was to provide standby power to DVC in times of distress.[71] The agency has a small T&D network of 463.63 CKM of which most is 11 KV or below in capacity. Installed generation capacity of DPL is 395 MW and it accounted for 6.1%[72] of energy generated in West Bengal in 1989-90 against 2.6%[73] of total energy sales, the reason being captive supply; industrial sales amount to 4.0% of total industrial energy sold in the State. DPL, is under the Public Undertakings Department of the State Government unlike WBSEB which is under the Department of Power;[74] the WBSEB is the subject of elaborate discussion in the forthcoming section and hence no special mention is made here. The WBSEB has a contractual arrangement to supply a minimum quantum of power to CESC, outside its system.

The DVC, set up in 1948 as a river-valley project on the lines of the Tennessee Valley Authority in the USA, was among the first major infrastructural projects in independent India.[75] The project spans areas on the catchment of the Damodar river falling in the states of

Bihar and West Bengal with a command area of 25235 sq.km. It comprises four major dams and one barrage for irrigation purposes along with a canal network of 2495 km. Hydel and thermal installed generation capacities in DVC add upto 1549 MW,[76] of which 410 MW[77] is at power stations located within West Bengal. The T&D network for evacuation, including inter-state tie-lines, amounts to 4575 CKM,[78] 1790.80 CKM[79] falls within the West Bengal system which are mostly transmission lines; however through grid linkages at Santaldih and Durgapur the DVC serves the needs of Kharagpur, Kolaghat, Belmuri, Durgapur projects and the Alloy Steel Plant at Durgapur, Chittaranjan Locomotive Works and the Howrah sector of CESC, all of which are in West Bengal.[80] For these local supplies distribution networks of the grid-linked systems are used. DVC generation is 15.4% and sales of energy in West Bengal amount to 13%[81] of total energy sold and energy sold to the industrial sector is 12.11%[82] of total HV industrial sales; no direct DVC sales are made to L&M voltage industrial consumers, although power drawn by other agencies from DVC obviously would reach such consumers, both in the industrial and agricultural sectors, on their own respective service networks.

The thermal power station at Kolaghat, which now belongs to WBPDCL (West Bengal Power Development Corporation Ltd.)has installed capacity of 420 MW but generation is entirely absorbed through the WBSEB system; hence no separate T&D network or account of sales exists for it. Nevertheless WBPDCL accounted for 21.1%[83] of generation of energy in West Bengal.The three other minor generating agencies account for about 1% of generation and 6.13%[84] of sales of energy mostly in commercial, industrial and railway sectors; their combined T&D network amounts to 1017.45 CKM.[85] This leaves 32% generation and 38.6%[86] energy sales in the State to the account of WBSEB.

2.9 The WBSEB

The WBSEB, constituted in 1955, is the principal generation and distribution agency in West Bengal. The "WBSEB operates in about 85,000sq.km. area out of the 89,000sq.km. for the state as whole. The rest of the area, about 4,000sq.km., is served by DVC, DPL and CESC. WBSEB maintains 5114 CKM of transmission lines and 84220 CKM of distribution lines serving the industry, agriculture and households sprawled all over the state".[87]

"Unlike most electricity boards in the country, the WBSEB does not enjoy a monopoly of either generation or transmission and distribution of power. There are also transmission lines outside its control within the State. There were in the state generating and distributing agencies from dates prior to the constitution of WBSEB, and three of them have continued their operations. The most important of these was and is the Calcutta Electric Supply Corporation which has preceded the WBSEB by more than half a century. Then there was the DVC formed in 1984 as multi-purpose development agency which ultimately became a power company and almost coeval with the WBSEB was the Durgapur Projects Limited which generated massive power along with the production of cokes, gas and basic chemicals. There were also a score of local electric supply companies in the smaller towns which were acquired by the WBSEB except for the Dishergarh Power Company and its associated unit".[88] Subsequently, the WBPDCL was separately constituted in 1987 with Kolaghat Thermal Power Station (KTPS) under its control.

"Till the WBSEB's own power house was installed at Bandel in 1965, the WBSEB was buying power in bulk from the CESC, DVC, and DPL. This power was distributed by the WBSEB in the towns whose electric supply companies had been absorbed into the WBSEB. The number of generating stations belonging to the WBSEB have increased - three thermal power houses at Bandel, Santaldih and Kolaghat, gas turbine installations at Kasba, Haldia and Siliguri and few small hydel installations at Jaldhaka, Bijanbari, Messanjore, Kurseong etc.".[89] In addition to these the WBSEB has in its charge a small diesel capacity coming mainly from the local electric supply companies that were taken over by it. Power received under the state-quota from NTPC/NHPC is also distributed through the WBSEB network.

2.10 Generation & Demand

Rich reserves of coal in the Raniganj-Asansol belt were the predominant factor in deciding installation of thermal power plants in the state. As a result generation in the state is highly thermal-dependent, as earlier seen. Installed generation capacity directly under WBSEB is tabulated below in the Table 2.10.

Table 2.10

Capacity of Generators Installed (MW) in WBSEB System

Type	Stations	Unit	As on(31.3.92)
THERMAL	1.Bandel	Unit - I	82.50
		Unit - II	82.50
		Unit - III	82.50
		Unit - IV	82.50
		Unit - V	210.00
	Sub Total :		540.00
	2.Santaldih	Unit - I	120.00
		Unit - II	120.00
		Unit - III	120.00
		Unit - IV	120.00
	Sub Total :		480.00
	Total Thermal		1020.00
GAS	1.Haldia	Unit - I	20.00
		Unit - II	20.00
	2.Siliguri	Unit - I	20.00
	Total Gas		60.00
HYDEL	1.Jaldhaka	Unit - I	9.00
		Unit - II	9.00
		Unit - III	9.00
		Unit - IV	4.00
		Unit - V	4.00
	Sub Total		35.00
	2.Messanjore	Unit - I	2.00
		Unit - II	2.00
	Sub Total		4.00
	3.Other Hydel Stations		7.31
	Total Hydel		46.31
DIESEL	1.All Stations		22.36
	Solar Photovoltaic Panels		0.04
	TOTAL		1188.71

Source: Power Statistics 1991-92, Central Statistical Cell,WBSEB, Table 1,pp.3.

Besides this, installed generating capacity of the other systems erving the State has been mentioned in the earlier Table 2.7. New capacity addition to the state system, excluding central sector power agencies, is expected to come on stream according to the following table:

Table 2.11

Addition to Generating Capacity in West Bengal (excluding DVC & NTPC)

	Stations	90-91	91-92	92-93	93-94	94-95	Total(90-95)
Thermal	KTPP	420	210	210	-	-	840
	CESC(Southern)	67.5	67.5	-	-	-	135
	Bakreswar	-	-	-	420	210	630
	Gouripur	-	-	-	-	120	120
Hydel	Teesta	-	45	22.5	-	-	67.5
	Rammam	-	-	51	-	-	51
	Mongpoo	-	-	-	5	-	5
TOTAL		487.5	322.5	283.5	425	330	1848.5

Source : Power Scene in West Bengal, WBSEB,pp.3.

Bakreswar and Gouripur are new thermal power projects under WBSEB, while the CESC (Southern) station will augment CESC capacity. Two new medium scale hydel power projects are being executed on the Teesta and Rammam rivers of which the Teesta Canal Falls Project is of a technologically-ingenious low-head variety. The Mongpoo (or Marma) H.E. Project is in the micro/mini hydel category.

As against these generation capacities demand projections for West Bengal prepared by the CEA are :

Table 2.12

Demand Projections for West Bengal (excluding DVC)

Year	Demand		Supply	
	Peak Power (MW)	Energy (MKWH)	Peak Power(MW)	Energy (MKWH)
1989-90	1904	10450	1516	11417
1990-91	2027	11079	1811	13030
1991-92	2193	11932	1932	14355
1992-93	2371	12836	2104	15831
1993-94	2565	13816	2387	17834
1994-95	2772	14882	2642	19730

Source : 13th Annual Power Survey, CEA, 1987.

"It can seen that the state power system is going to be augmented by 487.5 MW of new thermal power capacity by 1990 and another 277.5 MW by 1991. Between 1990 and 1993, there will be addition of 975 MW of thermal capacity to the state system. There is also a proposal under examination for installation of 2 x 60 MW Fluidised Bed Boiler units in the Eighth Plan period".[90] These additions are to be made on a total installed capacity within the state in 1989-90 of 2583.54 MW (excluding NTPC/NHPC and DVC) derated to 2556.49 MW. "An ambitious

project for harnessing hydro power at Ajodhya Hills in Purulia has been approved by the Planning Commission. The project for 1050 MW aided by a loan from OECF, will be executed by a Japanese team of experts. The project, expected during Ninth Plan, will provide firm hydel support for the thermal power base in the State which it lacks now".[71]

Downward adjustment of the CEA figures for "supply" needs to be made, however, particularly because of shortfall in capacity creation resulting from delays in commissioning 2 x 210 MW units at KTPS. Demand figures represent unrestricted power demand in a situation where all presently imposed restrictions on power off-take have been removed; the gap between supply and unrestricted demand consistently shows a peaking deficit, even though its magnitude is expected to lessen with the addition of capacity over projected years.

"Demand in CESC area has been increasing at a rate of about 3.61 percent and at 11.89 percent per annum in WBSEB area. The combined growth rate for the State as a whole comes to 7.26 percent per annum. Maximum peak demand reaches 1227 MW in 1988-89 in the graph presented below. In November 1989 it touched 1427 MW".[72] The demand for power exhibits strong seasonality. "While the seasonal demand in the CESC area shows a steady pattern, maintaining a regular growth over the years, the pattern for WBSEB area does not show similar regularity. The difference in the nature of the two curves arises from the difference in the composition of the consumers in the two areas. While the distribution of the consumers in different categories in CESC areas remains largely unchanged over the years, the same for the WBSEB area has been undergoing rapid change. Energisation of pumpsets, which has been recorded a significant rise in recent years, has been generating heavy pressure on load during boro season in the months of February to May".[73]

The graph[74] shows how in the months of March and April in 1989 coinciding with the boro season, demand for power increased by 90 MW and 110 MW respectively in the rural areas. The CESC system, being an urban-industrial feeder shows a more or less flatter monthly system demand curve whereas the WBSEB system which covers the entire rural Bengal shows peaking coinciding with boro and rabi agricultural seasons.

Details of 400/220/132 KV EHT lines in the WBSEB T&D network have already been included in T&D chart. In addition, a total route-length of 806.20 CKM comprises 66 KV EHT transmission lines. The 400 KV KTPS-Jeerat line of 134 CKM linking the NTPC feeder from Farakka is already operational alongwith the newly commissioned WBSEB-OSEB link through the KTPS-Talcher 400 KV transmission line, of which WBSEB maintains 124 CKM within the state of West Bengal. Thus WBSEB transmission lines consist of 259 CKM:400 KV, 1402 CKM:220 KV, 3036 CKM:132 KV, 806 CKM:66 KV, 5761 CKM:33 KV and 64290 CKM:11 KV to 3.3 KV and of 65778 CKM:LT lines.[75] Although each of the power agencies in West Bengal, besides WBSEB, has a command area of its own, their systems cannot really be considered to be independent because of the large volume of inter-system exchange of power.

POWER IN NORTH BENGAL

2.11 Regional Demand

The districts of Darjeeling, Jalpaiguri, Cooch Behar, Malda and West Dinajpur (recently bifurcated into North Dinajpur & South Dinajpur) constitute the region north of Ganges called North Bengal. The region is entirely within the WBSEB T&D circle. Transmission of power to North Bengal takes place via the North Bengal grid, details of which are presented in the attached T&D system chart. Outward linkage of the North Bengal grid with the South Bengal grid is at Gokarna 132/66 KVA Sub-Station in the WBSEB network and at Farakka Super-Thermal Power Station (STPS) on 220 KV NHPC-NTPC transmission. Besides these, other outward linkages of the North Bengal grid are with BSEB on the 220 KV Dalkhola-Purnea lines, and with ASEB at Gosaigaon and Bongaigaon on the Birpara-Bongaigaon 220KV NHPC line. Inward linkage with the Chukha H.E. Project in Bhutan is at Birpara, and with the NTPC at Farakka. The chart below presents a schematic picture of the entire EHT network in the region comprising 220/132/66 KV & 33 KV lines.

Table 2.13

Power stations/generation facilities locally located are at:

Hydel	Jaldhaka H.E.Project		
	Stage I	3 Unit x 9 MW	= 27 MW
	Stage II	2 Unit x 4 MW	= 8 MW
	Little Rangit/Bijanbari		= 2 MW
	Rinchington		= 2 MW
	Kurseong(Fazi)		= 1.2 MW
	Sidrapong		= 0.8 MW
	Singtam		= 1.2 MW
Gas	Siliguri	1 Unit x 20 MW	= 20 MW
Diesel	Darjeeling		= 11.8 MW
	Jalpaiguri		= 1.37 MW
	Cooch Behar		= 1.47 MW
	West Dinajpur		= 2.3 MW
	Malda		= -

Source : Annual Statistics 1989-90,WBSEB.

Besides this, the Farakka STPS with installed capacity of 630 MW has a feed-in to the North Bengal grid at Malda. Hydel stations in North Bengal account for 91.36% of the total hydro back-up available within the WBSEB system and 36.35% of the total hydel installations of WBSEB & DVC, combined.

First attention to the hydel potential of the hill-rivers in the North Bengal region dates back to 1919 when J.W. Meares included the Jaldhaka scheme in his report on "Water Power Resources of India".[96] The first techno-economic feasibility survey was undertaken by the Swiss consulting firm of Edward & George Gruner of Basle.[97] Their report estimates the total hydro-potential for three suggested schemes, namely Jaldhaka (77.3 MW), Jayanti & Katalung (11.1 MW) and Raidak (150 MW) at 238.4 MW.[98] Although the schemes were to be located at topographically more favourable sites at elevation on the Bhutan-

India border in Jalpaiguri district, generation from them was to feed the power demand of Cooch Behar district. Cooch Behar itself did not reveal suitable sites for the construction of a power plant because of the character of its rivers, flat topography and low heads on its rivers.[99]

The report states that the Jaldhaka and Raidak schemes were more economical compared to the Jayanti & Katulum scheme. The proposed power plants would be at "distances of 30-70 miles[48-113 km] away from Cooch Behar" and "quite close to the railway lines".[100] This would permit use of the energy generated for urban purposes, for tea-gardens and for railway electrification. An earlier report on the Jaldhaka H.E. Scheme had estimated total power demand of the tea sector to be more than 100 MW. With this energy being required between mid-March to November-end, it would be possible to cater to the tea load from the maximum monsoon generation of the suggested schemes. Besides this, other reasons cited in favour of the installation of the scheme were electrification of towns & villages and meeting industrial demands from tobacco factories.[101]

At the time of formulation of the Jaldhaka Scheme by the WBSEB justification provided was that "the development of hydro-electric power in West Bengal has not been proceeding on par with other States of India. This is due to comparatively high cost of development of water-power sites; and also because of the proximity of coalfields. In West Bengal where both hydro and thermal power resources are available, the two sources of power may be considered as complementary rather than competitive and ways and means should be found to develop hydro power in those regions of the State far removed from coalfield areas where the possibility of installation of thermal power plants is ruled out due to the difficulty and cost of transport of coal. Thus the hydro power will have to be regarded as the primary source of power in the northern districts of the State".[102] The stress at the time was on industrialisation which would ensure greater mobility of labour & materials and steady flows of investment, thus breaking "the insularity of the North"[103] i.e. North Bengal. A day was envisaged when South Bengal will be getting large blocks of electricity from the hydel stations of North Bengal through long transmission lines. The rate of depletion of the coal reserves available for thermal generation will determine how soon this will be a reality".[104]

The project in its ultimate form envisaged "supply of 1800 KW [18 MW] of firm power to the urban and rural areas of North Bengal, from Darjeeling and Siliguri in the west to Cooch Behar-Dinhata in the east, covering an area of about 2000 sq. miles, and about the same amount of seasonal power to the various tea estates of the Dooars area".[105] The project was, as such, to cater to the following electrical loads:

"1. Rural & Urban Firm Demands:
   a. Domestic
   b. Commercial
   c. Industrial
   d. Water works
   e. Street lighting

2. Special demands for Tea Industries.
3. Other industrial demands."[106]

It is thus seen that rural electrification was not very high on the scale of priorities then. It was stated that supply to rural areas is not likely to be economic and that, "pending any governmental decision of subsidies for purely rural supplies, electrification on an economic basis can only be provided for the town-loads".[107] Thus no estimate was made of projected R.E.agricultural loads.

Subsequently, the Project Report on Jaldhaka Stage-I states that "the existing demand of North Bengal can hardly be made with only Jaldhaka Hydro-Electric project even with full utilisation of its river potential. Wide gap exists between the demand and supply position".[108] Justification again centered around urban-industrial and tea loads.

At a more recent date, in the Project Report of Teesta Canal Falls Development Project, it is observed that "owing to inadequacy of power and lack of their infra-structural facilities, the northern part of West Bengal could not develop. In fact, the load-development in the area had been kept suppressed. Rate of progress in Rural Electrification and agricultural growth is also slow due to shortage of generation although potential need for such load is there".[109]

"If adequate power supply can be assured, demand for power from industries and other sectors will increase at a rapid rate. Tea gardens are pressing hard for release of more power. In fact a number of them are operating with their captive generating units and are eager to switchover to the grid of WBSEB system because of economical as well as operational problem associated with such small captive units. An interesting feature of the tea-industry is that its working season and demand for power synchronise with that of the secondary power generation available from Hydro Power stations during monsoon months. These features all the more are in favour for hydro-electric power development. The demand for power in this region (northern part of West Bengal) inspite of keeping it suppressed, is increasing and during 10th Annual Power Survey it has been estimated to exceed 175 MW by 1983-84. If and when an atmosphere is created of the prospects of availability of adequate and stable supply of power, the rate of increase in demand will be faster and is likely to well exceed the present forecast".[110] Elsewhere, it is stated that "in comparison to the southern part of West Bengal, the northern part viz. the districts of Darjeeling, Jalpaiguri, Cooch Behar, West Dinajpur and Malda have lower rate of growth, particularly in the industrial field. Beside inadequate road and rail connection with other parts, shortage of power is one of the factors contributing such retarded[sic] growth rate".[111] "Timber and tea are abundant in this area, the latter is foreign exchange earner also. The tea industry is now run mostly from their captive generating station with diesel drive and are eager to be connected to the power grid of North Bengal because of the uneconomical operation in isolated captive diesel stations. Quite a good number of industrial schemes such as paper pulp industries and other big/small industries are kept in abeyance for non-availability of adequate power in this region".[112] "Being situated away from the coal fields or oil fields and due to inadequacy of transport facility, power generation with only fossil-fuel is not an attractive proposition of this area".[113] "The Himalayan region is rich in hydro-power potential. In this respect northern part of West Bengal and particularly Darjeeling District is favourably placed. A number of rivers like Teesta, Jaldhaka, Torsa, Raidak, Rammam, Balason, Rangit, Mahananda and their numerous tributaries are flowing from the high Himalayan range to the flat terai region accross the districts of

Darjeeling, Cooch Behar, Jalpaiguri. On a rough assessment the feasible power potential of North Bengal rivers stands at 1324.26 MW approximately", details of which are furnished in the table below:[114]

Table 2.14-13(A)

Power Potential of North Bengal

Name of the River	Potential in MW
Jaldhaka	48
Ramman	190
Balason	66
Teesta Canal Drop	67.5
Mahananda	28
Raidak - Jayanti	161
Great Rangit	100
Teesta (High Dam)	600
Other small Kholas	63.76
Total	1324.26

Source : Project Report, Teesta Canal Fall Development Hydro-Electric Project, Fall Nos.- 2 & 3 Combined Planning & Engineering Wing, WBSEB, 1979,pp.I/2.

This is against figures for installed capacity and capacity to be added in Tables 2.13(A) and Table 2.11, respectively.

The last category of schemes in the table above are micro-mini hydel projects. It is said of them that "micro-mini hydel projects in the isolated areas of hills may serve not only the rural population but at the same time will decrease the amount of pique generated among them in comparison to their urban counter part, so far as development is concerned".[115] RE extension is to improve general conditions of living in rural areas as well as to provide cold-storaging facilities for agricultural produce. The concept thus evolves of RE in remote hill areas through micro-mini hydel generation having small transmission networks independent of in grid; such a concept is the best-fitted economic solution in the easy availability of perennial water resources which are renewable sources of energy,[116] and these schemes being short gestation schemes compared to large-scale power plants. Although their economic vitality has been subject to a certain amount of debate, since "in comparative terms the cost per unit kilowatt installed on cost per unit generation is higher than the conventional hydro projects",[117] their actual strength lies in their being viable options against conventional diesel or gas turbine technologies that are the only alternatives in remote non-accessible areas. Another consideration is that their existence frees grid power which can then flow to deficit-areas where energy options are much more limited. "Out of the assessed approximate potential of high and medium head micro-mini small hydel development in India (5000 MW) only a small fraction (260 MW) has so far been developed".[118] With financial assistance to micro-mini power generation schemes having been brought into the sphere of activities of the REC,[119] quicker progress may now be achieved.

The schemes recommended in North Bengal are listed below. Of these the Mongpoo H.E.Scheme has received sanction for inclusion under the Eighth Five Year Plan.

Proposal for WBSEB's ,Micro-Mini Hydel Schemes

1. Naxal Micro H.E.Scheme	Naxal Khola	4 x 125 = 500 KW
2. Neora Micro H.E.Scheme	Neora khola	3 x 225 = 675 KW
3. Dudhia Micro H.E.Scheme	Dudhia	4 x 200 = 800 KW
4. Marma Micro H.E.Scheme	Marma Khola	4 x 50 = 200 KW
5. Bhim Micro H.E. Scheme	Bhim Khola	4 x 200 = 800 KW
6. Teesta Bazer H.E. Scheme	Giel Khola	4 x 300 = 1200 KW
7. Bagora Sittong H.E. Scheme	Rayong N.	4 x 255 = 1020 KW
8. Goiobatham Jogitar H.E. Scheme	Chel & Kali Khola	4 x 480 = 1920 KW
9. Rishi H.E. Scheme	Rishi & Rongbong	4 x 700 = 2800 KW
10. Mirik H.E. Scheme.	Rongbong Khola	4 x 360 = 1440 KW
11. Tindharia Gabayari H.E. Scheme	Mahanadi & Jhoti Khola	4 x 160 = 640 KW
12. Tonglu-Manebhangang H.E. Scheme	Chota Rangit & Kali Khola	4 x 390 = 1460 KW
13. Dilpa-Barahatta H.E. Scheme	Dilpa Khola & Rithu Khola	4 x 900 = 3600 KW
14. Rangu H.E. Scheme	Rangu Khola	4 x 480 = 1920 KW
15. Jhepi H.E. Scheme	Jhepi Khola	4 x 180 = 720 KW
16. Mangpu H.E. Scheme	Kali Khola & Rambi Khola	4 x 1400 = 5600 KW
17. Payong H.E. Scheme	Relli Khola	4 x 540 = 2160 KW
18. Pedong H.E. Scheme	Mandum Khola	4 x 390 = 1460 KW

Source: Feasibility Report of Micro-Mini Hydel Schemes, WBSEB, Survey & Investigation Circle Hydel Civil Planning & Design Division Kurseong, 1984.

2.12 Transmission & Distribution

Given the profiles on generating capacity and T&D network in North Bengal it is instructive now to consider features of generation and sale of power/energy over the region. At the regional level the WBSEB is organised into six administrative divisions namely, Siliguri, Kurseong, Malda, West Dinajpur, Jalpaiguri and Cooch Behar, all falling within the Siliguri zone of the WBSEB. Local generation in North Bengal consists of the operational hydel installations earlier mentioned, the Siliguri Gas Turbine installation at Shivmandir and the small diesel installations of civic undertakings that had been taken over by the WBSEB. Of these the Gas Turbine is the largest single generating unit (20 MW), although the cost of generation through oil-fired gas turbines is much more than from hydel/thermal generation. Diesel generation is also uneconomic but inescapable because of the power deficit situation.

Since the study has special focus on Cooch Behar, some description of the advent of electricity in the district would be in order. Prior to the merger of Cooch Behar State with West Bengal, there were two civic electric supply undertakings at Cooch Behar and Dinhata towns. These were taken over by the WBSEB and electricity was supplied thereafter by a central diesel generating station at Cooch Behar having an aggregate installed capacity of 740 kw.[120] Subsequent additions augmented the installed diesel capacity of the Cooch Behar Power House to 2.8 MW of which 600 kw was taken away by the Jalpaiguri division for Alipurduar Electric Supply. In addition, there was another diesel power station at Changrabandha of 575 KW capacity which supplied 240 KW to Jalpaiguri for Mainaguri Electric Supply.[121] After the WBSEB takeover an 11 KV T&D line was built linking Dinhata, Alipurduar, Tufanganj, Bhetaguri and Dewanhat to the Cooch Behar diesel station, vestiges of which still survive. Following commissioning of the Jaldhaka H.E.P. the transmission system underwent a change, although diesel generation continued, mainly for domestic consumption, as a supplement to Jaldhaka power. Average monthly

consumption of energy in the district was 401.68 MWH in 1971 but there was an acute power shortage with power deficit being estimated at 4.5 MW.[122] Since then a number of the older diesel generation units have been put out of service although 1.97 MW of diesel capacity is still installed and operational in Cooch Behar division.

Changes in the T&D network following establishment of WBSEB's North Bengal grid have given rise to the local T&D network in the chart attached.

Transmission is now through the Birpara NHPC-WBSEB 220/132 KV linkage on the NHPC transmission line which is the feed-in for power from Chukha H.E.P. After step-down to 132 KV at the Birpara 132/66 KV Sub-Station(S/S) a 66 KV feed extends to the Birpara 66/33 KV S/S near Mainaguri. The 66 KV transmission from Mainaguri S/S enters Cooch Behar at the Mathabhanga 33/11 KV S/S from where two 11 Kv distribution lines serve Mathabhanga and Sitai-Sitalkuchi. On the NHPC-ASEB 132 KV link from Birpara another 132 KV transmission is drawn from the Alipurduar-Gossaigaon (ASEB) EHT line for the Alipurduar 132/66 KV S/S. From this point a 66 KV transmission feeds the Cooch Behar 66/33/11 KV S/S. From Cooch Behar, the old WBSEB 11 KV link line carries power to Dinhata, Tufanganj, Mathabhanga (Deep Tubewell Feeder), Cooch Behar local (two feeders) and one feeder to Patlakhowa at the northern border with Jalpaiguri district. From these points there are separate LT networks. However the 11 KV feeder has been rendered more or less redundant after construction of 33 KV HT T&D network from Cooch Behar S/S which feeds, separately, the Tufanganj and Dinhata 33/11 KV S/Ss, besides being linked in closed circuit to the Birpara(Mainaguri)-Mathabhanga feeder. 11 KV feeders from Tufanganj S/S serve Tufanganj Local, Chilakhana and Bakshirhat with separate LT networks at each of the three points. Similarly, 11 KV feeders from Dinhata S/S feed the LT networks of Dinhata Local, Gitaldah, Sahebganj and Balarampur. Of the twelve development blocks, Mekhliganj and Haldibari are served by the Jalpaiguri Division of WBSEB and the rest by Cooch Behar Division. The existing 66 KV line between Alipurduar and Cooch Behar is however considered inadequate to deal with future projected demand, and a 132 KV extension will eventually be required for Birpara S/S to Cooch Behar.[123]

2.13 Generation & Sale of Electricity in North Bengal

Recent figures for monthwise generation for the North Bengal power installations are presented below in the Table 2.14. It is seen that total generation for the year amounted to 105.95 GWH as against total WBSEB generation of 3223.35 GWH; this amounts to North Bengal generation of 3.28% out of total WBSEB generation:

Hydel generation in the North Bengal installations peaks in the month of August and is high over the monsoon months. The Gas Turbine is pressed into service during the months of April and May when electricity demand from boro cultivators is high; through the rest of the year it plays a supplementary role although other minor peaks are found in November and February, during the rabi season. The monthly-generation profile is however slightly different for North Bengal than for the whole WBSEB system in that except for the boro peak, seasonal generation in the WBSEB system is less intensified during the rabi months, an indicator of the more industry-oriented character of generation in the WBSEB system compared to North Bengal. Diesel generation patterns echo the same character for North Bengal. Diesel

generation mostly feeds the LT networks of urban centres. During the months when agricultural demand for electricity is expected to be high, urban power needs appear to be met increasingly from diesel sources even though at higher generation costs. Even though the generation statistics only refer to power supply from WBSEB sources and exclude such power flows into North Bengal which originate from NHPC/NTPC, the above pattern is so strongly delineated that the conclusion drawn relating monthwise generation to seasonal agricultural power-demands is only likely to be strengthened, were gross figures readily available.

Table 2.14

Monthwise Generation Statement for the Year 1989-90 in kwh

	April-89	May-89	June-89	July-89	Aug-89	Sept-89	Oct-89	Nov-89	Dec-89	Jan-90	Feb-90	March-90	Total
Jaldhaka I			7274790	8917780	10372920	9208540	8955910	7278350	5748200	6506500	5660100	5985400	75908490
Jaldhaka II			1966032	2631168	3438648	2513016	2861664	2205812	1594872	2042397	1775888	1885688	22915025
Kurseong					17184	101968	142996	96176	82956	103512	67388	86674	698846
Bijonbari	25630	40905	79575	34935	94200	147560	114420	164745	72420	40575	72350	78890	965405
Sidrapong	48624	33792	45540	81000	82000	83000	81000	86000	74400	67000	26400	89000	797756
Singtom	2010	8190											10200
Rinchington													
Subtotal	76264	82887	9365937	11664883	14004952	12054084	12155990	9831083	7572848	8759984	7602038	8124772	101295722
Siliguri(Gas)	1206000	799000	100000	483000	261000		271000	429000	162000	159000	519000	98000	4487000
West Dinajpur													
Jalpaiguri	2890	6760	4240	2860	2780	4040	2510	2230	2470	4840	550	1510	37680
Cooch Behar	5960	2020	200	600	2100	0				2060	870	7100	20910
Darjeeling	45118	11068	1220		118	1725	194	607	9937	14330	10040	13366	107723
Subtotal	1412496	984622	18845534	23816226	28275902	24113933	24585684	20094083	15320103	17708198	15734536	16361520	207244757
Grand Total	305208839	302490935	262035419	296086100	294343680	304006034	328220148	278536912	257547475	184425966	175993590	234456185	3223351283

Source : Annual Statistics 1989-90,WBSEB.

The next table pertains to divisionwise sales of electricity over the six North Bengal WBSEB divisions, within the different categories of low- & medium-voltage(L&MV) consumers. Separate figures for each division are given for rural consumers and total (rural+urban) consumers.

7.28% of WBSEB sale of energy for agricultural purposes are accounted for by North Bengal. Domestic consumption is at 11.03%, industry at 12.05%, and 16.76% of energy for commercial purposes is sold to North Bengal consumers; this is against 11.70% of total WBSEB sales to all categories of L&MV consumers which are accounted for by North Bengal. The percentage-patterns show that North Bengal demand is particularly low in the agricultural category and higher industrial and commercial categories. In rural areas, North Bengal sales amount to 11.27% of total WBSEB sales and domestic sales are proportionately higher at 13.7% against 7.28% agricultural sales for North Bengal against aggregate WBSEB sales in these categories. Once more, this reveals that power supply and therefore sales patterns are biased away from agriculture.

Table 2.15

District wise Sale of Energy (Rural - L&MV) for the year 1989-90
(in MWh)

	Domestic	Commercial	Industrial	Utilities	Agriculture	Total
Siliguri	2166.549	2075.025	1084.719	21.55	15.337	5363.18
Kurseong	710.745	589.153	548.672			1848.57
Malda	5311.467	1040.693	3197.867	160.824	8524.036	18234.887
W.Dinajpur	2051.389	1632.749	3972.14	179.83	3582.785	11418.893
Jalpaiguri	2938.265	1853.335	771.525	73.622	734.622	6371.369
Cooch Behar	2381.609	1216.738	826.253	155.865	152.743	4733.208
NBTotal	15560.024	8407.693	10401.176	591.691	13009.523	47970.107
WBTotal	113563.89	50839.679	78042.677	4928.057	178618.159	425793.271
%CB/NB	15.31	14.47	7.94	26.34	1.17	9.87
%NB/WB	13.70	16.60	13.33	12.00	7.28	11.27

Source : Annual Statistics 1989-90,WBSEB,pp.20-21.

Table 2.16

District wise Sale of Energy (Urban + Rural - L&MV) for the year 1989-90
(in MWh)

	Domestic	Commercial	Industrial	Utilities	Agriculture	Total
Siliguri	13648.989	12332.97	4350.519	149.913	15.337	30497.728
Kurseong	1916.415	1785.38	2124.972	27.08		5853.847
Malda	14954.267	5016.213	8324.567	1495.9	8524.036	38314.983
West Dinajpur	10058.914	7550.114	9817.44	796.352	3582.785	31805.605
Jalpaiguri	13304.524	9110.243	5046.925	861.004	734.622	29057.318
Cooch Behar	7525.969	4102.478	2701.315	478.415	152.743	14960.92
NBTotal	61409.078	39897.398	32365.738	3808.664	13009.523	150490.401
WBTotal	556722.95	238050.143	268692.649	44186.323	178618.159	1286270.232
%CB/NB	12.26	10.28	8.35	12.56	1.17	9.94
%NB/WB	11.03	16.76	12.05	8.62	7.28	11.70

Source : Annual Statistics 1989-90,WBSEB,pp.20-21

Cooch Behar patterns are even more or less than those of North Bengal: sales to agriculture account for only 1.17% of North Bengal sales, domestic sales are at a much higher 12.26% while industry is low at 8.26%, for rural+urban L & MV consumers. Within the rural group the proportion of domestic sales is even higher at 15.31%. Total sales of energy in Cooch Behar, compared to those for North Bengal stand at 9.87% for rural consumers and 9.94% for rural+urban consumers, indicating no particular rural/urban bias in the L&MV distributional flows.

Comparing Cooch Behar to the whole of North Bengal, energy sold for agricultural purposes is much lower leaving a higher balance proportion for domestic use; this points to weakness in pump energisation and in rural T&D networks for the district. Industrial sales also being low, the district would appear to face more severe electricity constraints than the region.

Two further tables are appended which detail the divisional features of the number of L&MV consumers and connected loads thereof.

Table 2.17

Districtwise Consumers (L&MV) for the year 1989-90

	Domestic	Commercial	Industrial	Utilities	LokDeep	Agriculture	Total	Rural Electrification
Siliguri	34071	9517	884	19	12	633	45136	645
Kurseong	14083	3168	198	8	-	4	17461	4
Malda	29520	6745	1679	70	2651	978	41643	3629
West Dinajpur	22904	8050	1639	55	2447	1265	36360	3712
Jalpaigur	26275	8433	905	46	397	-	36056	397
Cooch Behar	16565	7456	807	93	430	1351	26702	1781
NBTotal	143418	43369	6112	291	5937	4231	203358	10168
WBTotal	984405	277179	51550	1331	58468	19440	1392373	77988
%CB/NB	11.55	17.19	13.20	31.96	7.24	31.93	13.13	17.52
%NB/WB	14.57	15.65	11.86	21.86	10.15	21.76	14.61	13.05

Source : Annual Statistics 1989-90,WBSEB,pp.28-29

Table 2.18

Districtwise Connected Load (MW) in Respect of (L&MV) Consumers for the year 1989-90

	Domestic	Commercial	Industrial	Utilities	LokDeep	Agriculture	Total	Rural Electrification
Siliguri	20.44	7.42	9.73	0.24	0.05	0.09	37.98	0.15
Kurseong	7.61	2.06	1.88	0.07	-	-	11.61	-
Malda	15.64	4.11	16.79	0.91	0.08	21.21	58.75	21.29
West Dinaj.	11.45	4.67	15.41	0.60	0.10	19.58	51.81	19.68
Jalpaiguri	14.19	5.48	9.05	0.63	-	3.57	32.92	3.57
Cooch Behar	7.95	4.10	7.66	0.83	0.11	3.44	24.10	3.55
NBTotal	77.28	27.85	60.52	3.28	0.34	47.98	217.17	48.24
WBTotal	516.60	172.39	511.53	21.63	1.56	457.13	1680.83	458.68
%CB/NB	10.29	14.73	12.66	25.40	31.87	7.18	11.10	7.36
%NB/WB	14.96	16.15	11.83	15.17	21.98	10.48	12.92	10.52

Source : Annual Statistics 1989-90,WBSEB,pp.26-27

Coverage of the rural segment in Cooch Behar is again seen to be weaker than in the North Bengal region: as against 14.61% consumers and 12.92% connected loads in all categories for North Bengal against

the entire WBSEB service network, Cooch Behar accounts for 13.13% of North Bengal consumers but only 11.10% of its connected load. The REC-funded schemes of pump energisation and Lokdeep (electrification of rural households) constitute the RE segment; here too the same position is repeated with Cooch Behar having 17.52% of the North Bengal consumers in the RE category but only having 7.36% of the connected RE load. This distortion is even more glaring for agriculture where 31.93% of consumers of energy for agricultural purposes, belonging to Cooch Behar, account for only 7.18% of the connected North Bengal agricultural load. Electricity appears, once again, to be primarily directed to household electrification, both in the "Domestic" and "Lokdeep" categories.

Two conflicting possibilities could conceivably emerge from the foregoing: either Cooch Behar is characterised by low power-demands other than for domestic and commercial purposes, or that power-demands in the district are suppressed by restricted availability. Proper evaluation of these is to be made shortly through a study of demand and load projections, but a brief resumé of divisionwise power availability in the WBSEB's North Bengal grid gives preliminary insight. The T&D network in the district through 66 KV feed is weaker than in the other divisions where 132 KV NHPC/NTPC/WBSEB transmission is available; this is particularly so in the two other agricultural districts of North Bengal namely, West Dinajpur and Malda which also fed by South Bengal power through the FTPS-WBSEB transmission link at Malda (Malda also has access, for agricultural purposes, to the canal network of the Farakka Barrage). Figures for sales of energy and connected loads for these two divisions are also seen to be high in the above tables. Cooch Behar on the other hand, though also a district with an agricultural complexion, lies at the tail-end of WBSEB North Bengal grid. Furthermore, while Malda and West Dinajpur are located on arterial sections of the regional grid, Cooch Behar is basically a rural feeder-network and is thus prone to being shut out from the power supply during power-deficit periods. As a result penetration of electricity towards productive agricultural and industrial purposes has been slow for the district.

PROJECTIONS OF POWER DEMAND

2.13 A Critical Appraisal

After having defined the power scenarios, it is now necessary to go into their dynamic aspects which are relevant to an ongoing process of development. Additions to generating capacity have to keep pace with anticipated power demands if bottlenecks to development are to be avoided. For the purpose of the study, the short time-horizon is more appropriate during which no major industrial thrust might emerge which would change to basic sectoral profiles that presently exist in the economy; in the case of North Bengal and of Cooch Behar, potential demands for electricity have thus to be assessed in an economic framework where no major sectoral reorganisation occurs, even while recognising that in an interlinked power grid, electricity demand in other regions can still affect availability in the region considered.

Two important projective studies on the future of power in West Bengal and in the WBSEB system specifically, have recently been conducted. The report of the Perspective Power Planning Committee[124] (PPPC) results from a perspective study sponsored by the State Department of Power and comprehensively assesses projected power demand in the State alongwith phased additions to installed generating

capacity necessary to meet it. The WBSEB Report on Load Projection of West Bengal[125] is a system-cum-load study exclusively within the WBSEB system, excluding the licensed area of CESC and distribution areas of WBPDCL, DVC,DPL and miscellaneous other undertakings. As earlier stated, North Bengal falls entirely within the WBSEB T&D network and thus regional load projections in the latter study are fully relevant to it.

In West Bengal, a reasonable rate of growth in both power supply and industrial production was evident in the period upto 1965; the industrial slowdown that occurred thereafter presented a power deficit from emerging upto 1972[126] even though no addition to generating capacity took place during the inter-regnum.[127]The apparent perception during that period was that the State had surplus capacity in power generation. Following 1972, serious imbalances between demand and supply came to the fore, leading to intensive loadshedding, and figures for consumption from 1972 onwards indicate restricted rather than real demand for electricity in the face of stringent restrictions imposed on power drawal. The shortages were further aggravated by the wide gap between installed capacity and generation of existing power stations[128] which led to very low plant load factors (PLF).Disruptions in power supply visibly acted as a constraint to industrial development in the state.[129]

Despite this, 60% of energy consumption in the State is by the industrial sector, even after 15% restriction on power drawal by it. In North Bengal, development of many identified industries have been stalled because of power constraints; the region also has a large of pent-up demand for electricity from the tea industry which if met would permit substitution of diesel-operated equipment by electrically-operated units.[130] "The load potential of North Bengal is much better than would appear on superficial examination".[131]

The PPPC Report also recognises that "in an economy dominated by the rural sector, urban centres can emerge around the rural market places and centres for commercial transactions quite unrelated to location of industries"[132]and that "the demand for electricity follows the development of these centres in the rural areas".[133]

With the extension of RE, pressure is gradually building up for electrically-driven STWs even though electricity consumption for agricultural purposes is still low at present in the State because of supply constraints. "With free availability of electricity the demand for energisation of pumpsets and for conversion of diesel units is expected to rise rapidly in the state contributing to a high rate of growth of agricultural load",[134] thereby saving about 15×10^4kilolitres of petroleum products, annually.[135] For RE schemes the power requirement is assessed to be 100 MW for the state at cent-percent electrification of its 39,000 mouzas(villages), on the assumption of an average load of 5 KW[136] per mouza. Feasible programmes for installation/conversion of electrified minor irrigation schemes are projected to lead to 1500 MW connected load and 770 MW[137]demand at the end of the Eighth Plan, which can only be met by staggering agricultural drawals into the night hours to ensure a flatter system-demand curve. In keeping with these and the projected demands of other major sectors, the Desired Level of Demand (DLD) is projected to rise to around 4070 MW at the turn of the century with an annual growth rate of 6.8%.[138]

The power-perspective study uses the regression co-efficient approach to power projection, relating power demands to other economic factors that influence the consumption of electricity; it is critical of the 'past-trend' approach because of possible distortion on account of the appearance of restricted demand in the power scenario of West Bengal arising out of continuing power deficits since 1972. Projection for the agricultural segment of the new-priority RE programme was however on the assumption of 10% growth p.a. in the absence of previous trends. Actual consumption of energy by agriculture which was 1.26% in 1980-81 grew to 1.88% (1986-87), 2.31% (1987-88) and 4.28% (1988-89).[139] This was against an all-India average of 16.22% in 1981, and against 12.15% for an industrial state like Maharastra in the same year. Agricultural consumption of energy in West Bengal, which was projected to reach around 10% by 1988-89, did not however materialise, giving indication of the constraints operating because of power shortfall; thus the ultimate projection to 15%[140] by 2000 A.D. must necessarily be scaled down. Similarly, projected per capita consumption of energy which was expected to reach 307.67 kwh,[141] is not likely to be maintained either. The share of industry in total consumption of energy was projected to decline from 64.58% in 1980-81 to 61.53% in 2000 A.D. with an assumed industrial growth rate of 7% p.a., mainly because of sharp focus on energisation of agricultural operations to make use of West Bengal's natural endowments of water resources and to obviate the situation where most of the State's agriculture was monsoon-dependent and 60% of cultivated land was mono-cropped. Although the RE thrust has lead to accelerated energisation of pumpsets, supply constraints in electricity have dampened the impact, and accelerated expansion of thermal generating capacity combined with the curtailment of T&D losses would provide the short-term solution. Besides this, greater drawal of surplus power from neighbouring power grids, especially after linkage of the EREB grid with the NEEPCO grid via Salakuti in Assam, would provide some relief once the Loktak H.E.P. and Kopili H.E.P. under NEEPCO were commissioned.[142]

The load-projection study by the WBSEB covers the WBSEB system within the state. The utility of the study is that sub-station load projections by district are available as against the previous report where projection is on gross-basis. Nevertheless, the projective methodology which is of 'past-trend' type is subject to methodological criticism because of the problems of extrapolating the trend of *unrestricted* load from time-series where power constraints have been under operation since 1972. Three scenarios are however sketched out : the *optimistic* projection is on the *maximum* growth of demand exhibited in the past; the *pessimistic* scenario is on the basis of the *minimum* growth recorded in the past; and the *likely* scenario is on the basis of growth exhibited in the immediately-previous time-period. In the case of RE, projection for load growth on account of rural household demand is made on the targeted objective of 90% coverage by 2010 A.D., while estimation of the irrigation load is on the basis of 'past-trend' in RLI and DTW installation in the absence of a futuristic programme of pump energisation for STWs schemes. Hence no explicit targeting of projections is made on the basis of estimated potential of identified groundwater and surface-water resources. The categories of electrical load for which projection is made are : Domestic, Commercial, LTIndustrial, HTBulk Consumption, Agricultural,and Railway Traction. In the case of industry too, 'past-trend' projection is avoided because of instability of industrial growth rates and the

standard CEA formulation of 10% growth p.a. has been adopted as optimistic. System losses are expected to be reduced gradually over the time-horizon with the overall system power factor rising from 0.78 to 0.80 and then 0.85, eventually with improvements in the T&D system.[143]

The Table 2.19 below projects aggregate load over all districts within the WBSEB command area uptil the year 2010 A.D.. Aggregate system load for the WBSEB system is expected at the least, under the pessimistic scenario, to increase to 3646.74 MW from a 1989-90 level of 723.44 MW in terms of overall simultaneous demand; for districtwise projection, where system demand for each district is treated as a isolated T&D load, the aggregate simultaneous district-demand is projected to increase, at the least, from 832.33 MW to 4194.48 MW over the same time-horizon. The difference between the two demands is because within an integrated grid transmission of power to an isolated district on 66/33 KV T&D lines is via trunk-lines of 132 KV and hence actual system demand is less than if the loads of different districts were to be met separately. Thus under the optimistic scenario, with maximum assumed load-growth rate, the corresponding figures for overall simultaneous demand rise from 768.09 MW to 6566.70 MW and, for aggregated simultaneous district-demand, from 883.69 MW to 7555.08 MW.

Taking overall simultaneous demand as being the more realistic appraisal of overall system load, it is found that the WBSEB load on account of the North Bengal districts would increase from around 75-80 MW in 1989-90 to between 450-987 MW in three scenarios over the projected periods, with the percentage share of North Bengal in the total WBSEB load rising from around 10.5 percent to between 12-15 percent; the lower figures represent least-growth pessimistic scenarios. Percentage share of Cooch Behar in overall WBSEB system load would rise from around 0.9% to 2%, under most optimistic assumptions; the corresponding share of Cooch Behar in the total North Bengal system load would rise from around 9 percent to between 12-13 percent. It is interesting to contrast the WBSEB projection with the projection of the PPPC; the latter projects power demand (unrestricted) of North Bengal to rise to 404 MW[144] by 2000 A.D., Compared to WBSEB figures between 220-335 MW - thus even at most optimistic projections of restricted demands, the power shortfall in the region would be in the neighbourhood of 69-70 MW by that year. Similarly, unrestricted power demand for Cooch Behar in the PPPC projection would reach 76 MW[145] in 2000 A.D.; load projections of restricted demand are around 44 MW at the most optimistic and hence power shortfall in the district is 32 MW or more. In percentage terms, the share of Cooch Behar in North Bengal power demand would be around 18.81% as against WBSEB projections of between 10.5 -11.5 percent.

Table 2.19

Electricity load projections for WBSEB Command Areas in West Bengal
Aggregate Projected Load over All Districts
Demand In MW

Pessimistic

		1989-90	1994-95	1999-2000	2004-2005	2009-2010
24 Parganas		166.78	292.00	427.11	598.44	796.56
Howrah		65.46	100.80	134.37	178.51	232.08
Hooghly		152.75	240.00	385.52	555.94	758.30
Burdwan		70.92	127.20	177.56	244.82	322.19
Birbhum		31.95	62.40	92.78	136.86	184.48
Nadia		93.52	165.60	244.75	347.68	470.96
Murshidabad		45.98	90.40	134.37	197.21	275.44
Midnapur		76.37	138.40	203.95	293.27	404.66
Bankura		17.15	34.40	49.59	69.71	94.36
Purulia		24.16	48.00	70.39	101.16	136.02
Maldah		18.70	36.80	51.99	74.81	102.01
West Dinajpur		16.37	34.40	51.93	79.91	114.77
Cooch Behar		7.79	17.60	26.39	41.65	62.05
Jalpaiguri		25.72	43.20	71.98	106.26	147.92
Darjeeling		18.70	32.00	50.39	70.56	92.66
All Bengal	asmw	832.33	1463.20	2175.14	3096.78	4194.48
	osmw	723.44	1271.78	1888.84	2691.65	3645.74
S Bengal	asmw	745.04	1299.20	1920.39	2723.60	3675.05
	osmw	647.57	1129.24	1669.16	2967.29	3194.27
N Bengal	asmw	87.29	164.00	252.75	373.18	519.42
	osmw	75.87	142.55	219.68	324.36	451.47
NB:AB	asmw	10.49	11.21	11.63	12.05	12.38
CB:AB	asmw	0.94	1.20	1.21	1.35	1.48
CB:NB	asmw	8.95	10.73	10.44	11.16	11.95

(continued next page)

asmw - aggregate simultaneous Mega watt
osmw - overall simultaneous mega wall

AB - All Bengal
NB - North Bengal
CB - Cooch Behar

Electricity load projections for WBSEB Command Areas in West Bengal

Aggregate Projected Load over All Districts

Demand In MW

Optimistic		1989-90	1994-95	1999-2000	2004-2005	2009-2010
24 Parganas		180.17	404.00	604.42	355.44	1430.44
Howrah		67.08	128.00	175.15	263.51	380.77
Hooghly		161.45	353.20	547.04	914.64	1355.65
Burdwan		74.88	172.00	247.93	371.47	556.71
Birbhum		35.10	93.60	146.36	238.01	361.22
Nadia		99.05	241.60	347.10	437.77	706.30
Murshidabad		49.14	128.00	197.54	317.06	469.16
Midnapur		81.12	188.00	283.92	462.42	717.35
Bankura		17.34	48.80	75.18	123.26	191.24
Purulia		24.96	63.20	95.97	158.11	251.58
Maldah		19.50	50.40	78.38	126.66	198.39
West Dinajpur		17.94	52.00	87.97	165.76	273.68
Cooch Behar		8.58	24.80	43.99	83.30	148.74
Jalpaiguri		27.30	67.20	109.57	192.11	310.23
Darjeeling		19.50	44.80	67.18	105.40	211.63
All Bengal	asaw	883.69	2065.60	3104.68	4914.93	7555.09
	osaw	768.09	1795.37	2698.52	4271.95	6566.70
S Bengal	asaw	790.88	1826.40	2717.59	4241.70	6420.41
	osaw	687.41	1567.47	2362.07	3686.79	5580.48
N Bengal	asaw	92.82	239.20	387.09	673.23	1134.66
	osaw	80.67	207.91	336.45	585.16	986.22
NB:AB	asaw	10.50	11.58	12.47	13.70	15.02
CB:AB	asaw	0.97	1.20	1.42	1.69	1.97
CB:NB	asaw	9.24	10.37	11.36	12.37	13.11

Likely		1989-90	1994-95	1999-2000	2000-2005	2009-2010
24 Parganas		173.13	355.86	501.55	752.40	1058.22
Howrah		66.29	118.35	153.59	216.79	294.09
Hooghly		157.53	403.84	467.96	713.29	1024.22
Burdwan		73.31	147.94	203.98	297.56	404.59
Birbhum		33.53	73.57	109.59	169.18	237.14
Nadia		97.48	196.72	283.97	419.13	566.08
Murshidabad		48.35	101.56	155.19	237.20	335.74
Midnapur		79.55	163.94	231.18	347.72	497.23
Bankura		17.94	39.98	56.79	85.02	118.15
Purulia		24.18	51.98	83.19	126.67	184.44
Haldah		19.50	40.78	59.99	90.12	125.80
West Dinajpur		17.94	40.78	67.99	112.22	174.24
Cooch Behar		8.58	19.99	33.60	58.66	97.75
Jalpaiguri		26.52	56.79	85.59	134.33	198.04
Darjeeling		19.50	35.19	57.59	83.32	118.15
All Bengal	asaw	863.30	1847.28	2551.77	3843.60	5433.88
	osaw	750.36	1605.61	2217.94	5340.77	4723.00
S Bengal	asaw	771.28	1653.75	2247.00	3364.95	4719.90
	osaw	670.38	1437.41	1953.04	2924.74	4102.43
N Bengal	asaw	92.02	193.52	304.77	478.64	713.98
	osaw	79.98	168.21	264.90	416.03	620.57
NB:AB	asaw	10.66	10.48	11.94	12.45	13.14
CB:AB	asaw	0.99	1.08	1.32	1.53	1.80
CB:NB	asaw	9.32	10.33	11.02	12.26	13.69

Source : Load Projection of West Bengal upto 2010 AD Perspective & Analysis, WBSEB,1988.

Since the focus of the study is on agricultural demand for electricity, WBSEB system projections of agricultural load are the subject of the Table 2.20.

Table 2.20

Aggregate Agricultural Projected Load over All Districts

Demand In MW

Pessimistic		1989-90	1994-95	1999-2000	2004-2005	2009-2010
24 Parganas		14.09	29.77	41.83	62.73	88.85
Howrah		1.15	2.04	2.59	3.59	4.71
Hooghly		10.79	21.23	28.67	41.61	57.36
Burdwan		11.24	22.52	30.70	44.95	62.43
Birbhum		5.66	11.95	16.77	25.16	35.63
Nadia		26.68	56.12	78.33	116.85	164.82
Murshidabad		15.67	51.69	49.46	69.88	89.05
Midnapur		9.70	19.88	27.48	40.66	56.99
Bankura		5.29	6.59	8.99	13.15	18.25
Purulia		0.01	0.01	0.02	0.04	0.05
Maldah		5.65	11.36	15.54	22.81	31.73
West Dinajpur		3.69	7.54	10.40	15.37	21.52
Cooch Behar		1.22	2.59	3.68	5.68	8.00
Jalpaiguri		1.27	2.00	2.82	4.23	6.01
Darjeeling		0.18	0.29	0.41	0.62	0.90
All Bengal	asaw	110.28	225.58	311.70	461.32	546.21
	osaw	95.85	196.07	270.92	400.97	561.76
S Bengal	asaw	98.27	201.80	278.85	412.61	578.15
	osaw	85.42	175.40	242.37	358.63	502.52
N Bengal	asaw	12.00	23.78	32.85	48.70	681.16
	osaw	10.45	20.67	28.55	42.33	59.24
NB:AB	asaw	10.89	10.54	10.54	10.56	10.55
CB:AB	asaw	1.11	1.15	1.18	1.23	1.24
CB:NB	asaw	10.16	10.91	11.22	11.66	11.73
%ABAG/AB	asaw	13.25	15.42	14.34	14.90	15.41
%SBAG/SB	asaw	13.19	15.33	14.52	15.15	15.73
%NBAG/NB	asaw	13.75	13.50	13.00	13.05	13.12
%CBAG/CB	asaw	15.65	14.74	13.96	13.63	12.89

(continued in next page)

Aggregate Agricultural Projected Load over All Districts

Likely		1989-90	1994-95	1999-2000	2004-2005	2009-2010
24 Parganas		15.45	13.16	50.88	76.41	96.80
Howrah		1.21	2.09	2.99	4.15	5.07
Hooghly		12.13	22.68	34.88	50.67	63.19
Burdwan		12.62	24.02	37.48	54.89	68.74
Birbhum		6.39	12.76	20.72	31.00	39.22
Nadia		29.48	58.74	95.08	142.08	179.67
Murshidabad		16.87	32.71	51.86	76.63	96.36
Midnapur		11.16	21.58	34.10	50.33	63.24
Bankura		3.54	6.81	10.74	15.76	19.77
Purulia		0.01	0.01	0.02	0.04	0.05
Maldah		6.08	11.74	18.52	27.33	34.32
West Dinajpur		4.41	8.42	13.18	19.35	24.24
Cooch Behar		1.37	2.90	4.43	6.82	8.63
Jalpaiguri		1.84	2.10	3.44	5.15	6.54
Darjeeling		0.18	0.28	0.47	0.71	0.91
All Bengal	asaw	121.95	237.39	378.79	561.33	706.73
	osaw	106.00	206.85	329.23	487.90	614.27
S Bengal	asaw	108.87	212.55	338.74	501.97	632.05
	osaw	94.63	184.75	294.43	436.30	549.37
N Bengal	asaw	13.08	25.44	40.05	59.36	74.68
	osaw	11.37	22.11	34.81	51.60	64.91
NB:AB	asaw	10.72	10.69	10.57	10.57	10.57
CB:AB	asaw	1.12	1.22	1.17	1.22	1.23
CB:NB	asaw	10.47	11.40	11.07	11.50	11.60
%ABAG/AB	asaw	14.13	12.88	14.84	14.60	13.81
%SBAG/SB	asaw	14.12	12.85	15.08	14.92	13.39
%NBAG/NB	asaw	14.21	13.14	13.14	12.48	10.46
%CBAG/CB	asaw	15.97	14.51	13.19	11.63	8.86

Source : Load Projection of West Bengal upto 2010 AD Perspective & Analysis, WBSEB,1988.

Agricultural load in the WBSEB system is projected to rise from 95-106 MW in 1989-90 to 562-855 MW in 2010 A.D., the range being accounted for by pessimistic versus optimistic scenarios. It may be mentioned that as agricultural load in West Bengal is entirely catered to by the WBSEB system, the figures are representative of the whole state. In percentage terms the agricultural load in North Bengal is expected to stay around 10.5 -11.5 percent of the total agricultural load in the WBSEB projection as against 17.5 percent[146] in the PPPC projection. Projected North Bengal demands for agricultural power vary from 154 MW (PPPC) to 29-51 MW (WBSEB) in 2000 A.D. which raises the agricultural power shortfall in the region to 103-125 MW. It is thus clear that power restrictions in North Bengal presently fall disproportionately heavily on agriculture; extrapolation of present

Aggregate Agricultural Projected Load over All Districts

Optimistic		1989-90	1994-95	1999-2000	2004-2005	2009-2010
24 Parganas		15.17	48.62	76.73	115.85	147.15
Howrah		1.19	2.81	4.71	7.44	10.24
Hooghly		11.91	33.07	49.99	73.67	90.54
Burdwan		12.41	35.60	54.36	80.66	101.63
Birbhum		6.28	19.79	31.07	46.81	59.38
Nadia		28.96	90.75	127.76	171.75	194.03
Murshidabad		16.57	49.37	76.27	113.89	143.92
Midnapur		10.98	32.46	50.05	74.66	94.29
Bankura		3.48	10.18	15.64	23.29	29.39
Purulia		0.01	0.01	0.02	0.04	0.05
Maldah		5.97	17.64	27.17	40.52	51.16
West Dinajpur		4.33	12.53	19.18	28.43	35.91
Cooch Behar		1.32	4.43	6.91	10.38	13.23
Jalpaiguri		1.37	3.32	5.18	7.82	9.94
Darjeeling		0.18	0.29	0.47	0.70	0.90
All Bengal	asaw	120.13	360.86	545.51	795.96	983.76
	osaw	104.42	313.65	474.14	691.83	855.06
S Bengal	asaw	106.96	322.65	466.60	708.06	872.61
	osaw	92.97	280.44	422.94	615.43	758.47
N Bengal	asaw	13.17	38.21	58.91	87.90	111.15
	osaw	11.45	33.21	51.20	76.40	96.65
NB:AB	asaw	10.96	10.59	10.80	11.04	11.30
CB:AB	asaw	1.10	1.23	1.27	1.20	1.34
CB:NB	asaw	10.05	11.61	11.72	11.80	11.90
%ABAG/AB	asaw	13.59	17.47	17.57	16.11	13.02
%SBAG/SB	asaw	13.52	17.67	17.91	16.69	13.59
%NBAG/NB	asaw	14.19	15.97	15.22	13.06	9.80
%CBAG/CB	asaw	15.43	17.88	15.71	12.46	8.83

(continued in next page)

restricted scenarios as has been done by the WBSEB's projective methodology is responsible for the alarming shortfall noted above. In the WBSEB projection, Cooch Behar's share in total North Bengal agricultural demand is expected to be around 11-11.7 percent in 2000 A.D. whereas the PPPC projects Cooch Behar share at around 23 percent. It is noticed that with power restrictions still operative a disproportionately large agricultural power shortfall of around 29-32 MW would devolve on Cooch Behar, the sole reason being that the 'past-trend' method of projection is biased in favour of districts where substantial electrification of agricultural facilities has already taken place in the past; thus Cooch Behar where energisation was constrained earlier by weak T&D networks must continue to suffer if policy making is done on the basis of WBSEB projections.

Table 2.21

Cooch Behar District : Distribution of Projected Loads By Category: Pessimistic, Likely & Optimistic Scenarios

Demand In MW

	Pessimistic					Optimistic					Likely				
	1989-90	1994-95	1999-2000	2004-05	2009-10	1989-90	1994-95	1999-2000	2004-05	2009-10	1989-90	1994-95	1999-2000	2004-05	2009-10
Domestic & Commercial	2.15	4.95	7.96	13.96	22.29	2.36	6.53	12.62	26.79	55.04	2.35	5.85	10.28	20.57	37.96
	27.62	29.10	30.60	33.23	35.95	27.73	26.10	28.69	32.28	36.27	27.68	29.27	31.14	34.67	39.13
LT Industrial	3.63	8.32	12.04	18.83	26.80	3.96	11.97	21.19	40.28	72.77	3.94	9.44	15.73	27.51	44.36
	46.54	48.91	46.32	44.84	43.22	46.82	47.89	48.17	48.52	48.84	46.33	47.22	47.67	46.62	45.73
Agricultural	1.22	2.59	3.68	5.68	8.00	1.32	4.43	6.91	10.38	13.23	1.37	2.90	4.43	6.82	8.66
	15.89	15.26	14.17	13.52	12.90	15.58	17.74	15.71	12.50	8.88	16.12	14.51	13.43	11.57	8.93
HT Bulk Demand	0.80	1.14	2.32	3.53	4.90	0.84	2.07	3.27	5.55	8.97	0.84	1.00	2.56	4.09	6.02
	10.21	6.73	8.91	8.41	7.93	9.87	8.27	7.44	6.69	6.02	9.87	9.01	7.77	6.94	6.21
Total	7.80	17.00	26.00	42.00	62.00	8.50	25.00	44.00	83.00	149.00	8.50	20.00	33.00	59.00	97.00

Cooch Behar District : Distribution of Projected Loads By Category: Pessimistic, Likely & Optimistic Scenarios (percentage share)

	Pessimistic					Optimistic					Likely				
	1989-90	1994-95	1999-2000	2004-05	2009-10	1989-90	1994-95	1999-2000	2004-05	2009-10	1989-90	1994-95	1999-2000	2004-05	2009-10
Domestic & Commercial	27.62	29.10	30.60	33.23	35.95	27.73	26.10	28.69	32.28	36.27	27.68	29.27	31.14	34.67	39.13
LT Industrial	46.54	48.91	46.32	44.84	43.22	46.82	47.89	48.17	48.52	48.84	46.33	47.22	47.67	46.62	45.73
Agricultural	15.63	15.26	14.17	13.50	12.90	15.58	17.74	15.71	12.50	8.88	16.12	14.51	13.43	11.57	8.93
Railway Traction															
HT Bulk Demand	10.21	6.73	8.91	8.41	7.93	9.87	8.27	7.44	6.63	6.02	9.87	9.01	7.77	6.94	6.21
asaaa	100.00	100.00	100.00	100.00	100.00	100.00	100.00	100.00	100.00	100.00	100.00	100.00	100.00	100.00	100.00

Source : Load Projection of West Bengal upto 2010 AD Perspective & Analysis, WBSEB, 1988.

The upshot of the comparison of WBSEB restricted-demand projections to PPPC unrestricted-demand is to bring out the fact that weaknesses in the power profile of North Bengal and of district-constituents of it will be perpetuated and even exacerbated if perspective approaches to power planning are not followed in their rigour. In the interest of equity and balanced regional development a more intensive effort needs to be made to nullify the power-differentials that have plagued backward regions.

References

1. World Development Report 1989, Washington, Commercial Energy,Table 5,pp.72.
2. Ibid pp.173.
3. Ibid pp.172.
4. India 1988-89 - A Reference Annual, Compiled & Edited by Research & Reference Division, Ministry of Information & Broadcasting, Government of India, pp.430.
5. Ibid pp.430.
6. The Economic Times' Statistical Survey of the Indian Economy 1984, K.Ezekiel(ed) pp.213.
7. India 1988-89 - A Reference Annual, op.cit. pp.433.
8. Ibid
9. Ibid pp.433-434.
10. Ibid pp.437.
11. Ibid pp.431.
12. World Development Report 1989, op.cit. Table 8.4, pp.298.
13. Economic Survey 1986-87, Quoted in ibid, World Bank Country Study 1989, pp.294.
14. Ibid pp.294.
15. Desai Ashok V, The Indian Electric Power System, Economic & Political Weekly, October 10,1987, pp.1753.
16. Ibid pp.1755.
17. Report of the Energy Survey of India Committee (1965), New Delhi, pp.185.
18. C.V.J.Varma & A.R.G.Rao, Histry of Development of Hydro Power in India, Indian Journal of Power & River Valley Development, April-May,1992, pp.102.
19. Power Development Programme in the Seventh Plan,Indian Journal of Power & River Valley Development, January-February,1986, Abstract from the Seventh Five Year Plan, 1985-90,vol.II, Government of India, Planning Commission, New Delhi. pp.106.
20. Rajagopal S, Power Scenario - A Performance Review, Indian Journal of Power & River Valley Development, December,1989,pp.294.
21. CEA, National Power Plan : A Perspective, vol I, 1983.
22. Narayan R.K, Power Development in India, Indian Journal of Power & River Valley Development, December,1990, pp.395.
23. Desai Ashok V, op.cit. pp.1753.
24. CEA, National Power Plan : A Perspective, op.cit. pp.29.
25. World Development Report 1989, op.cit. pp.35.
26. Desai Ashok V, op.cit. pp.1756.
27. Ibid
28. Ibid
29. Ibid
30. Narayan R.K, op.cit. pp.396.
31. Naidu B.S.K, Potential Areas for Improvement in Productivity and Efficiency of Power Sector, Indian Journal of Power & River Valley Development, December,1990, pp.407.
32. Ibid pp.408.
33. News Paper Report, Hindusthan Times, August 17,1991.
34. Puttaswamy A.L, Present-day Problems of Interconnected Power Systems in India, Indian Journal of Power & River Valley Development, March 1984, pp.73.
35. Kochar B.S. & Dua G.L, Rural Electrification in India, Indian Journal of Power & River Valley Development, May,1978, pp.126.
36. AIRCRC Report 1969, Government of India.

37. Kochar B.S. & Dua G.L, op.cit. pp.127.
38. Sachchidananda & Verma K.K, Electricity and Social Change, 1983, Janaki Prakashan, Patna, pp.2.
39. Sixth Five Year Plan, Planning Commission, 1980, pp.283.
40. Seventh Five Year Plan, Abstract vol II,Planning Commission,1985.
41. Narayan R.K, op.cit. pp.395.
42. REC Bulletin vol XI, December-1980, REC, New Delhi.
43. Ibid
44. Statistical Appendix, Economic Review 1990-91, Government of West Bengal, pp.221.
45. Annual Report, 1987-88, REC, pp.8.
46. Kochar B.S. & Dua G.L, op.cit. pp.128.
47. Ibid pp.129.
48. Ibid pp.130.
49. Ibid pp.128.
50. Desai Ashok V, op.cit. pp.1759.
51. Desai Ashok V, op.cit. pp.1757.
52. Verma R.S, Rational Approach to Rural Electrification, Indian Journal of Power & River Valley Development, May,1978, pp.133.
53. Ibid
54. Narayan R.K, op.cit. pp.400.
55. Ibid
56. Desai Ashok V, op.cit. pp.1757.
57. Progress Report, EREB, CEA, November-January,1987, pp.(ii).
58. Ibid
59. Ibid
60. Ghatak A, An Overview of Power System Management in West Bengal with reference to West Bengal State Electricity Board in Particular, Indian Journal of Power & River Valley Development, January-February, 1986, pp.30-32.
61. Ibid pp.32.
62. Report of the Barman Commission on Power Generation and Supply, Calcutta 1975, pp.37.
63. Ibid
64. Ibid pp.38.
65. Ibid pp.36.
66. Ibid pp.35.
67. Annual Statistics 1989-90, WBSEB, pp.62-63.
68. Ibid pp.67.
69. Report of the Barman Commission, op.cit. pp.600.
70. Ibid pp.590.
71. Ibid
72. Annual Statistics 1989-90, op.cit. pp.67.
73. Ibid
74. Report of the Barman Commission, op.cit. pp.598.
75. DVC : Harnessing a Great River Valley : Corporate Report, DVC, 1986, pp.2.
76. Ibid pp.5.
77. Annual Statistics 1989-90, op.cit. pp.56-58.
78. DVC, op.cit. pp.5.
79. Annual Statistics 1989-90, op.cit. pp.62-63.
80. Report of the Barman Commission, op.cit. pp.612.
81. Annual Statistics 1989-90, op.cit. pp.67.
82. Ibid pp.60-61.
83. Ibid pp.66.
84. Ibid pp.67.
85. Ibid pp.62-63.
86. Ibid pp.67.
87. Power Scene in West Bengal (Compendium), WBSEB, pp.9.
88. Bengal Power, House Journal of WBSEB,1985,pp.9.
89. Ibid
90. Power Scene in West Bengal (Compendium), op.cit. pp.4.
91. Ibid pp.5.
92. Ibid pp.6.

93. Ibid
94. Ibid pp.14.
95. Power Statistics 1991-92, Central Statistical Cell, WBSEB, pp.6.
96. Report on Jaldhaka Hydel Project, WBSEB ,1958, Section 1,pp.1.
97. Preliminary Report by George Gruner on the Hydroelectric Power Development in the Districts of Cooch-Behar and Jalpaiguri, Edward & George Gruner Consulting Engineers, Basle, Switzerland, 1950.
98. Ibid pp.19.
99. Ibid
100. Ibid
101. Ibid pp.21.
102. Report on Jaldhaka Hydel Project, op.cit. Foreward pp.vii.
103. Ibid
104. Ibid Foreward-pp.viii.
105. Ibid
106. Ibid pp.32.
107. Ibid pp.36.
108. Jaldhaka H.E.P. Stage-I, Project Report, Survey & Investigation Circle, WBSEB, Kurseong, 1983, Section II,pp.
109. Project Report, Teesta Canal Fall Development Hydro-Electric Project, WBSEB, 1979,pp. I/4.
110. Ibid pp.I/5.
111. Ibid pp.I/1.
112. Ibid
113. Ibid
114. Ibid pp.I/2.
115. Feasibility Report of Micro-Mini Hydel Schemes (1st Phase), WBSEB,Survey & Investigation Circle, Kurseong, 1984, pp.I/1.
116. Ibid
117. Ibid pp.III/2.
118. Ibid pp.I/9.
119. Annual Report,1987-88, REC, pp.11.
120. Report on Jaldhaka Hydel Project (1958), op.cit. pp.31.
121. Nazumder Durga Das, West Bengal District Gazetteers, West Bengal,pp.89.
122. Ibid
123. Report of Perspective Power Planning Committee (PPPC), Power Perspective for West Bengal 1984-2000 AD., Department of Power, Government of West Bengal, 1984. pp.60.
124. Ibid
125. Load Projection of West Bengal upto 2010 AD Perspective & Analysis, WBSEB, 1988.
126. Report of PPPC, op.cit. pp.4-6.
127. Report of the Barman Commission, op.cit. pp.26.
128. Ibid
129. PPPC, op.cit. pp.4-6.
130. Ibid pp.7-8.
131. Ibid pp.8.
132. Ibid pp.9.
133. Ibid
134. Ibid
135. Ibid
136. Ibid pp.13.
137. Ibid Computed from pp.13 & 32.
138. Ibid pp.15.
139. Statistical Appendix, Economic Review 1990-91, Government of West Bengal, pp.146.
140. PPPC, op.cit. pp.18.
141. Ibid pp.19.
142. Ibid pp.106.
143. Load Projection of West Bengal upto 2010 AD Perspective & Analysis, op.cit. pp.1-4.
144. PPPC. op.cit. pp.59.
145. Ibid
146. Ibid pp.100.

POWER CHARTS

EHT INTERCONNECTION OF EREB

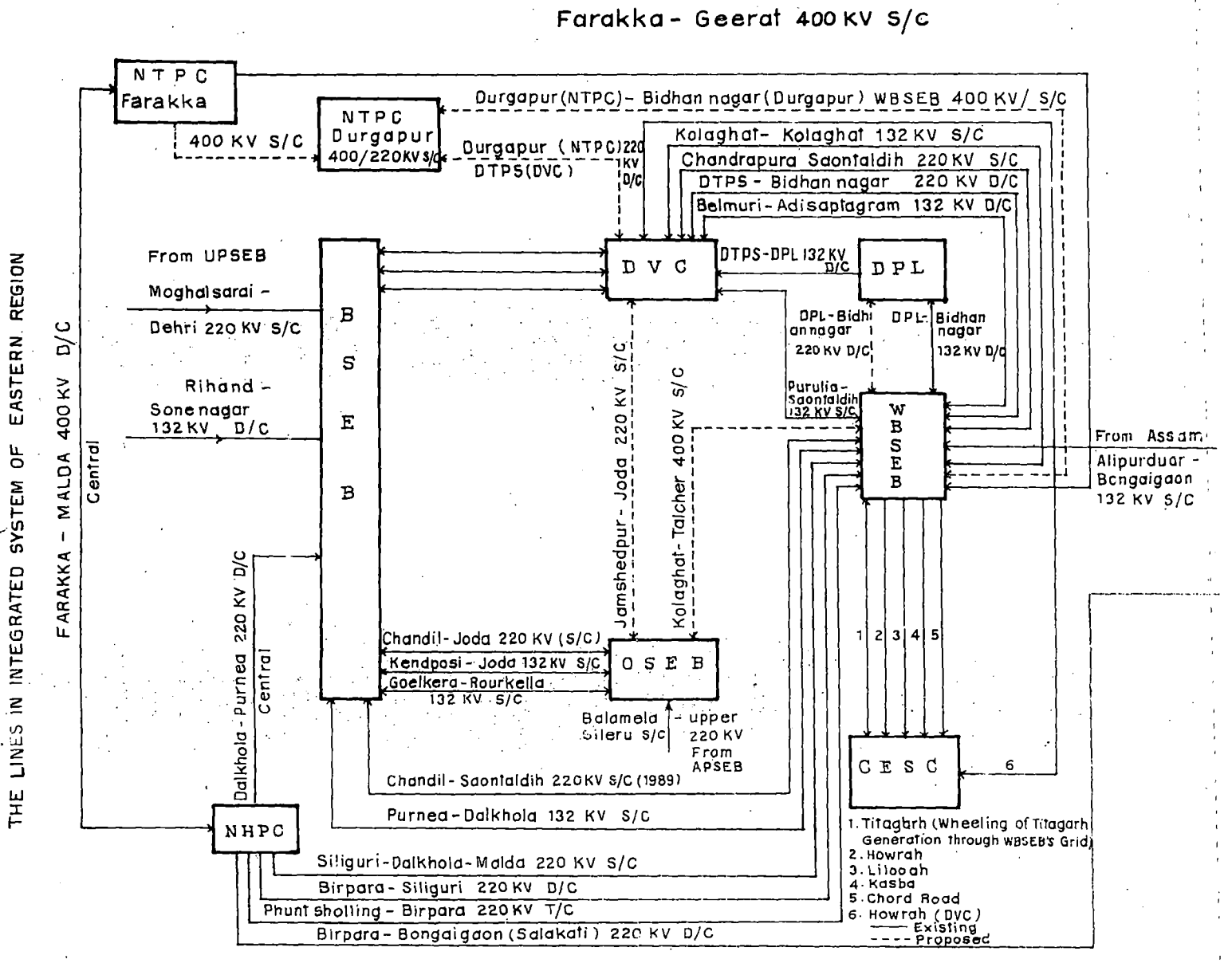

THE LINES IN INTEGRATED SYSTEM OF EASTERN REGION

TRANSMISSION LINES - NORTH BENGAL

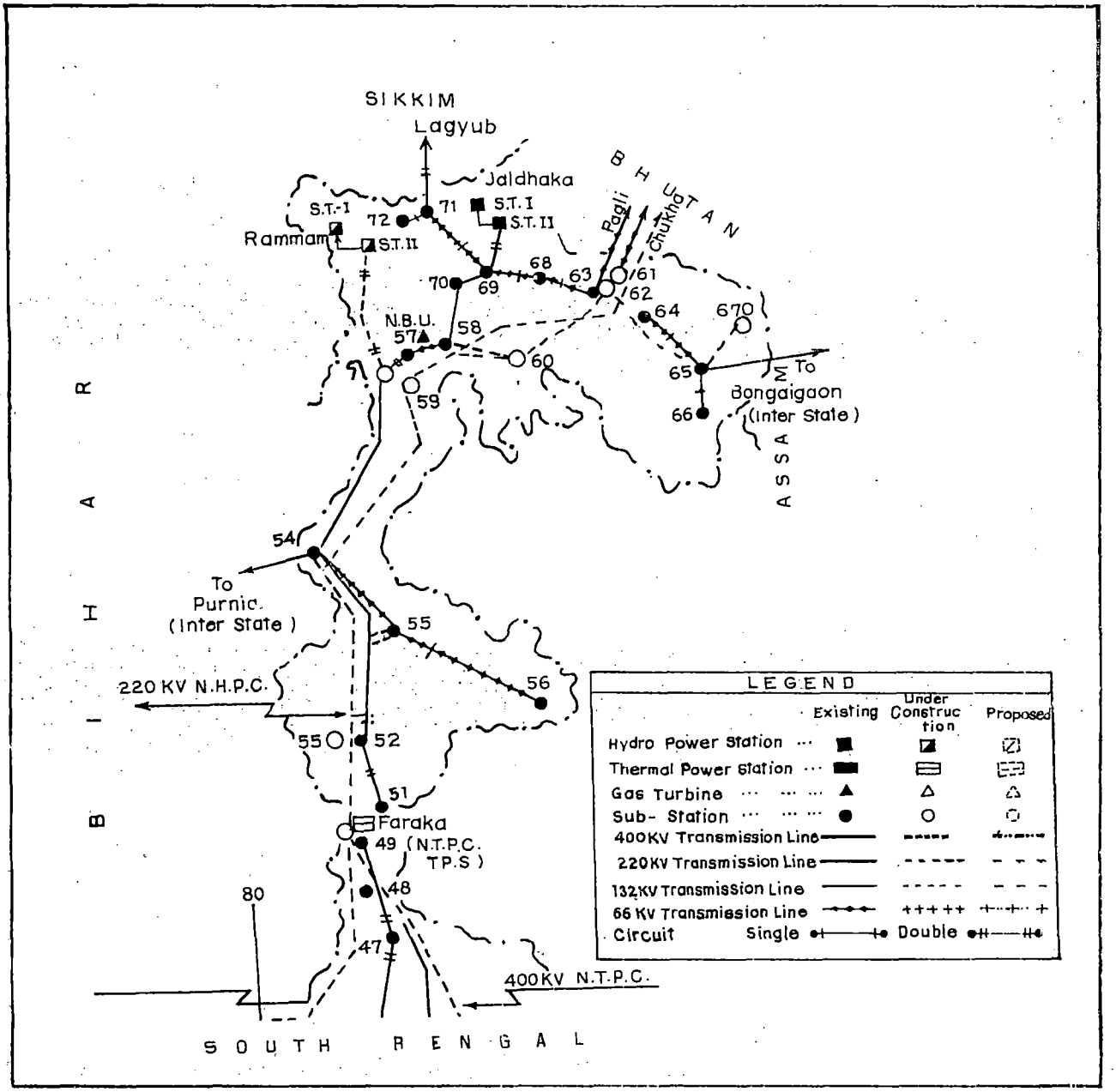

POWER SYSTEM OF NORTH BENGAL

W B S E B

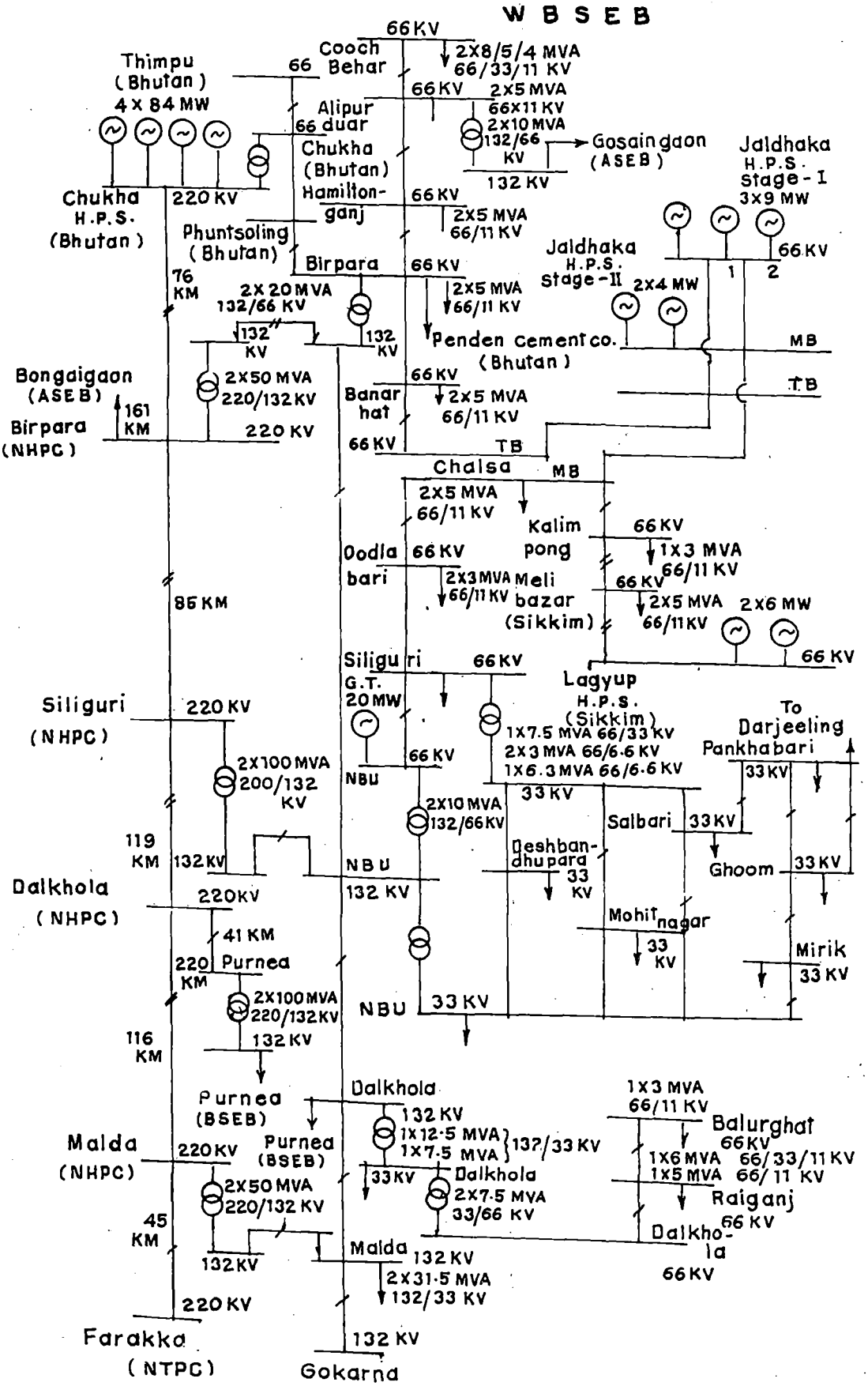

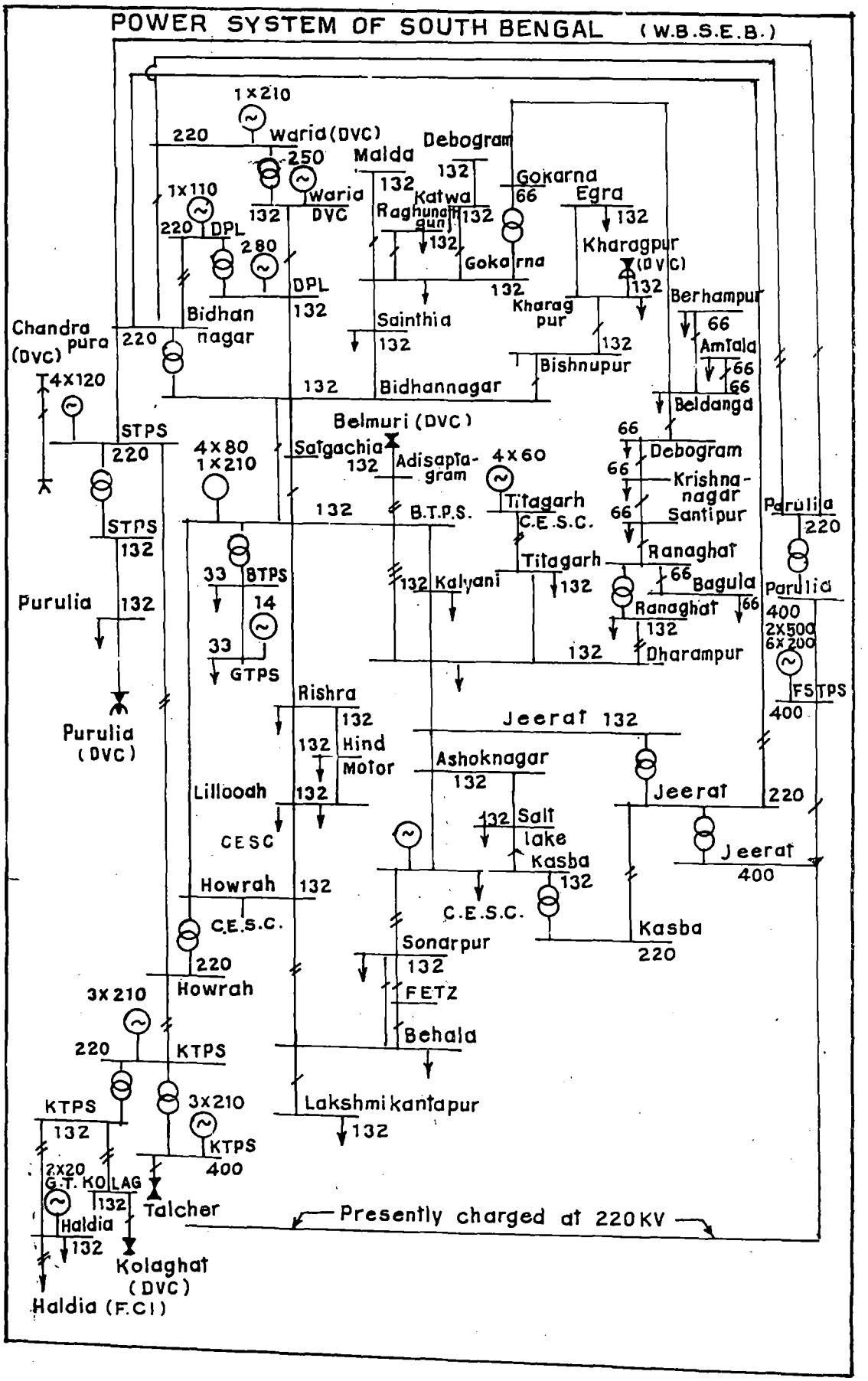
POWER SYSTEM OF SOUTH BENGAL (W.B.S.E.B.)
1×210
220
Waria (DVC)
250
Waria
DVC
132
1×110
220
DPL
280
DPL
132
Bidhan nagar
Chandra pura (DVC)
220
4×120
STPS
220
STPS
132
Purulia
132
Purulia (DVC)
4×80
1×210
132
33
BTPS
14
33
GTPS
Rishra
132
132
Hind Motor
Lilloodh
132
CESC
Howrah
132
C.E.S.C.
220
Howrah
3×210
220
KTPS
KTPS
132
2×20
G.T. KOLAG
132
Haldia
132
Kolaghat (DVC)
Haldia (F.C.I)
3×210
KTPS
400
Talcher
Malda
132
Katwa
Raghunathganj
132
132
Gokarna
132
Sainthia
132
Bidhannagar
132
Belmuri (DVC)
Satgachia
132
Adisaptagram
4×60
B.T.P.S.
132
Kalyani
132
Lakshmikantapur
132
Debogram
66
Gokarna
Egra
132
Kharagpur (DVC)
132
Kharagpur
132
Bishnupur
Berhampur
66
Amtala
66
66
Beldanga
66
Debogram
66
Krishnanagar
66
Santipur
Titagarh
C.E.S.C.
Titagarh
132
Ranaghat
66
Bagula
Ranaghat
66
132
Dharampur
132
Jeerat 132
Ashoknagar
132
132
Salt lake
Kasba
132
C.E.S.C.
Sonarpur
132
FETZ
Behala
Jeerat
220
Jeerat
400
Kasba
220
Purulia
220
Purulia
400
2×500
6×200
FSTPS
400
Presently charged at 220 KV

POWER SYSTEM OF COOCH BEHAR.

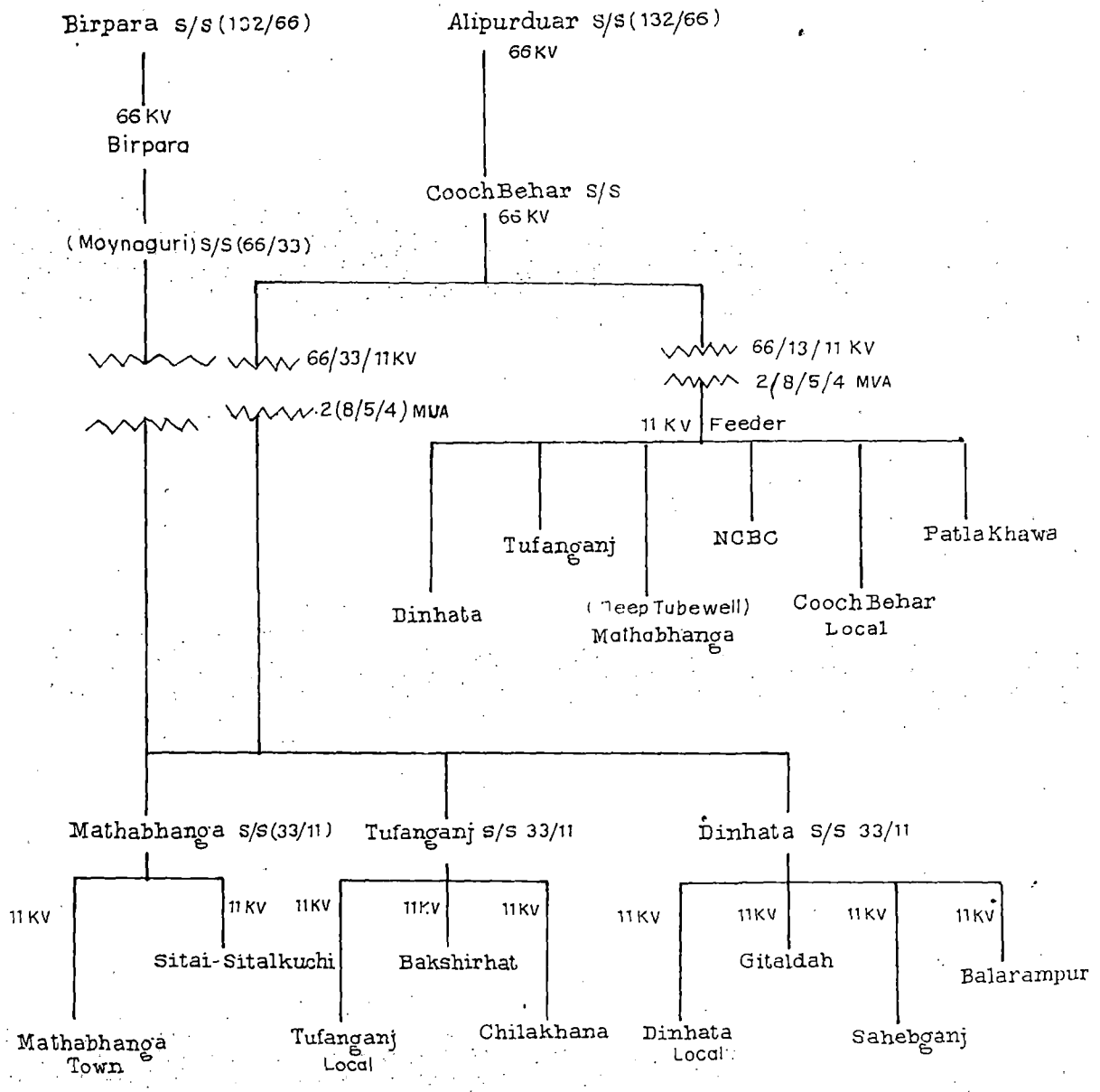

Average System Demand.

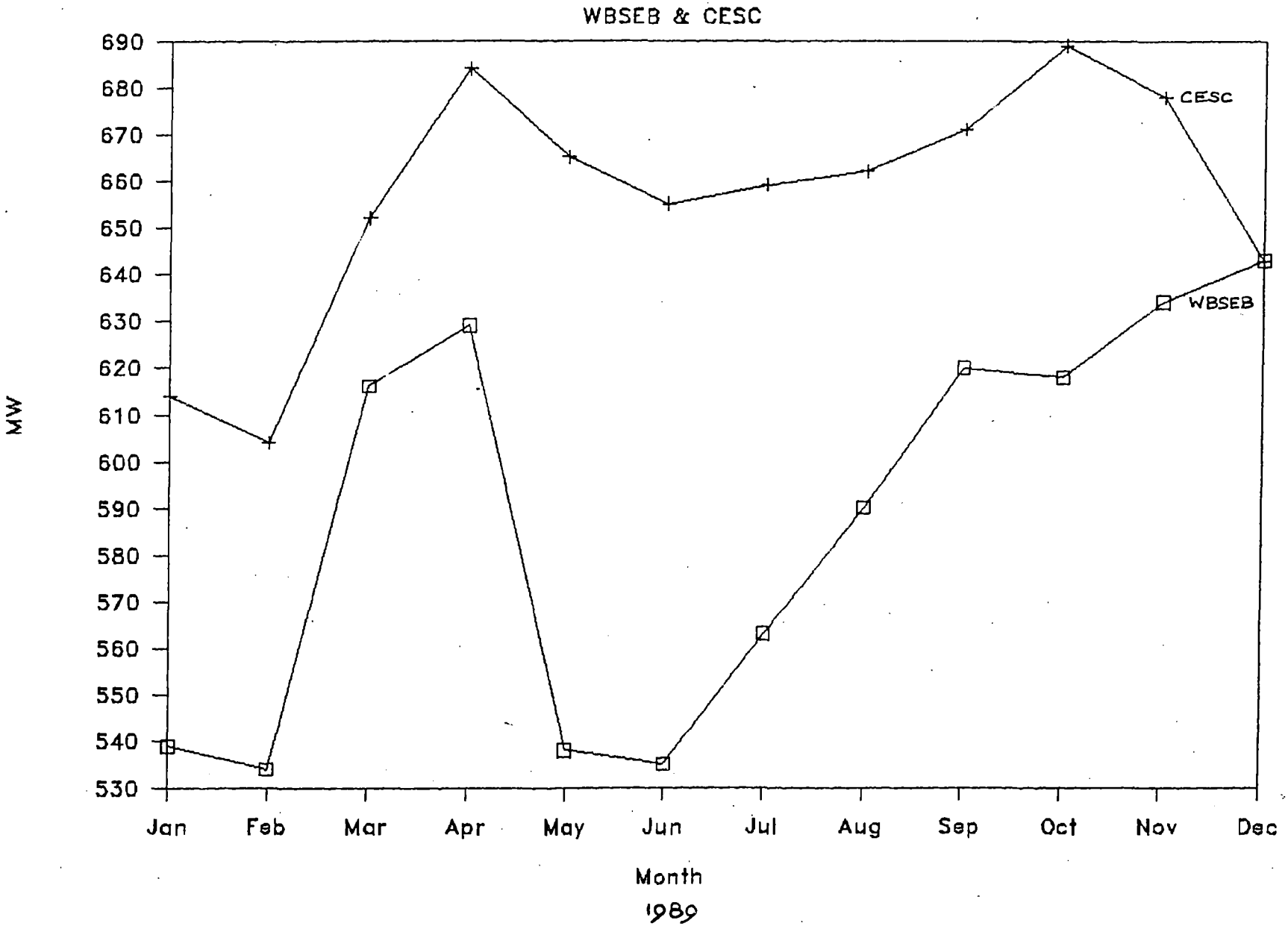

CHAPTER III

THE CASE-STUDY : BACKGROUND INFORMATION

COOCH BEHAR DISTRICT

3.1 General Features

In making empirical investigation of the problem that defines the underlying basis of the present research study, namely, impact of electricity and its absorption on rural development, the region chosen for the sample-study was Cooch Behar district. Two reasons dictated the stress : the district is entirely served by the North Bengal grid of WBSEB, and is a no-industry district where economic activity consists primarily of small & medium agriculture. Urban development is in its nascent stages, rendering the task of economic development in the district subject to heavy rural bias. Essential descriptive information that defines the regional features that envelop questions to be explored by the empirical study are presenting below; these have however been kept to a necessary minimum to avoid widening the focus beyond the issues relevant to the study.

Cooch Behar : Historical & Geographical Background

"Koch Bihar (now, more commonly, Cooch Behar) district in the north-eastern frontier of India is included in the Jalpaiguri division of West Bengal. Until the 28th day of August 1949 Koch Bihar was an Indian State ruled by the Maharaja of Koch Bihar who had been a feudatory prince under the British Government".[1] Following accession to the Dominion Government of India Koch Bihar has been administered as a district of West Bengal since January 1,1950.[2] Historical sources place the territory under the the suzerainty of the former kingdom of Kamrup, earliest mention of which is found in epigraphic records of the Gupta period.[3] In later times, bifurcation of Kamrup led to its western half acquiring the identity of Kamta.[4] The name 'Koch Bihar' is first used in the Shah Jahan Nama in the mid-17th century. The name derives its etymology as the abode of the Koch tribes who are the aboriginal residents of the region.

Following a series of kings of the Danaba, Kirata and Asura [5] dynasties whose lineal antecedents are obscure, power appears to have passed into the hands of local chiefs. Hiuen Tsarig(Yuan Chwang) visited the kingdom in 1639 while the Asura kings were still in ascendance. In later times kingship passed along through the Pala and Khen dynasties. The Narayana dynasty succeeded to the thrown after the period of Muslim conquest that led to the break-up of Kamrup in the late 15th century, and ruled the kingdom till the time accession.

The district of Cooch Behar is located between the geographical coordinates 26°32'46"N and 25°57'56"N,and 89°52'00"E and 88°45'02"E, forming a trapezoidal land area of 3,386km.²"Besides the congregated area included in the boundaries of the district mentioned above, there are enclaves or <u>chhits</u> which are outlying and detached tracts of land situated inside the district of Rangpur in Bangladesh".[6] Similarly, enclaves of Bangladesh territory such as Dahagram,Chhit Kuchlibari and Angar Pota also exists within the district. Mutual access rights to these formed a part of the 'Indira-Mujib Pact' between the Governments of Bangladesh and India in 1974; however the process of implementation has been slow because of numerous impediments.

"With the exception of a few miles at the extreme southern tip of Tufanganj subdivision where the river Raidak forms the boundary and for about five miles(8km) to the north of Mekhliganj thana where the river Jaldhaka forms the boundary, there is no natural boundary of the district. The northern boundary and most parts of the western boundary are formed by the district of Jalpaiguri. From west to east the following thanas of the district of Jalpaiguri abut on the border of Koch Bihar, viz. Jalpaiguri,Maynaguri, Dhupguri, Falakata, Alipur Duars and Kumargram. The southern boundary of the district is very much indented and the following thanas of the district of Rangpur in Bangladesh form the southern boundary, viz. from west to east, Boda, Debiganj, Domar, Dimla, Patgram, Hatibandha, Kaliganj, Lalmonir Hat, Phulbari Nageswari and Bhurungamari. The eastern boundary is formed by the district of Goalpara of Assam".[7]

The entire district "forms a part of the great alluvial plain of the Ganges-Brahmaputra system. The topography in the district gradually slopes southwards, the maximum elevation in the district being 55m above M.S.L.(mean sea level), While the minimum elevation is about 30m above M.S.L. The northern part of district, which in general has a higher elevation, forms the transitional zone between the northern terai zone of the Himalayas and the southern alluvial soil. Apart from the flat, monotonous or gently sloping topography in the district, no other important physiographic features are noticed in any part of district".[8]

By a reference to the attached maps it can be seen that the district is traversed longitudinally by the south-flowing river systems of Teesta, Jaldhaka(Mansai), Torsa, Kaljani, Raidak and Gadadhara whose innumerable minor tributaries drain the entire district in the south/south-easterly direction before flowing into Bangladesh. All these rivers show meandering trends and are prone to change their course frequently during heavy floods, as is characteristic of typical alluvial plains. All the major rivers are snow-fed and perennial, having their origin in the high Himalayas mostly in Bhutan and, in the case of Teesta and Jaldhaka, in Sikkim. The minor rivers however are seasonal and flow only during the monsoon. The huge amount of boulders, pebbles and soil that forms the stream-land of the perennial rivers is deposited in the northern part of the district after which the topographic decline becomes gentler with their southward progress. Over the geological time-scale this has led to the evolution of the topography of the region.

As such there are no mountain peaks or hills within the district and no-significant forest tract, although at the oscillation areas of the rivers there are a number of waste-lands covered mostly with heavy grass and reed.[9] Along the large number of abundant channels left by the shifting rivers lie bils or marshes, some of which establish a connection with the rivers during the monsoon while others are completely insular accumulations of water. These bils provide catchments for a heavy rainfall in the district and are of economic importance in that they serve as fisheries besides providing water to the cultivators for the steeping of the jute. "The greater part of the district is cultivated and is composed of green fields studded with timber trees and an inferior variety of orange trees".[10]

Administrative divisions within the district are more or less those inherited from the former princely state; these comprise five sub-divisions viz. Cooch Behar Sadar (P.S.Kotwali), Dinhata (P.S. Dinhata and Sitai), Tufanganj (P.S. Tufanganj), Mathabhanga (P.S.

Mathabhanga and Sitalkuchi) and Mekhliganj (P.S. Mekhliganj and Haldibari).

Old land-settlement records dating from the period before accession identify six revenue parganas where Cooch Behar pargana comprised the Kotwali thana and a part of the Tufanganj thana.[11] The District Agricultural Department still retains elements of these in the re-classified Agricultural Sub-divisions for the district which number four [12] and include Tufanganj within Cooch Behar (agricultural) sub-division.

There were originally[13] eleven community development blocks in the district, namely, Cooch Behar I & II, Dinhata I & II, Mathabhanga I & II, Sitai, Sitalkuchi, Mekhliganj, Haldibari & Tufanganj, subsequently increased to twelve with the bifurcation of the last-named block into Tufanganj I & II. The head of district of the administration is the Deputy Commissioner belonging to the Indian Administrative Service who is also appointed District Magistrate under the Criminal Procedure Code. Two Additional Commissioners holding subordinate charge of Estates Acquisition and Land Reforms,and General Administration, respectively, assist him. The sub-divisional administration are headed by Deputy Collectors or Sub-Divisional Officers(SDO) with equivalent rank of Deputy Magistrates, Sub-Deputy Magistrates assist these Officers. The district police administration is in the hands of the Superintendent of Police assisted by an Additional Superintendent of Police, both members of the Indian Police Service. There are also two Deputy Superintendents of Police at headquarters, while each sub-division has an Inspector of Police holding charge. At the block level a Block Development Officer(BDO), generally belonging to the West Bengal Civil Service is in position assisted by other officers holding separate charges of extension community development activities like agricultural extension, social education, panchayat extension etc.[14]

The district has seven towns; of these the two municipal towns are the district headquarters with class II status and the sub-divisional town of Dinhata with class IV status; among the other four municipal towns are Mathabhanga with class IV status, Haldibari with class V status and Mekhliganj & Tufanganj with class VI status. The single non-municipal town of Guriahati has class IV status. Of these towns, Mekhliganj is the smallest urban unit among all statutory towns in West Bengal.[15]

Cooch Behar town is the capital of the former feudatory state and is therefore somewhat of a showpiece among the above towns with well laid-out roads and arboreal covering and a number of large tanks or dighis. There are number of excellently architectured buildings including the Cooch Behar Palace that date from its princely past. However, its present importance is as a center of trade in agricultural produce. The other towns are all urban agglomerates owing their growth to their emergence as independent market/trading centers, except for Guriahati which in reality is an urban outgrowth of Cooch Behar town.

3.2 Population

Cooch Behar District had a total population of 17.71 lakhs vide the 1981 Census, which stands at 21.58(1991 Census [16])lakhs a decade later. Density of population over the district is 523 persons/km^2 and 637 persons/km,[217] respectively. Blockwise and police-stationwise distribution of this population is available in the tables below.

Table 3.1

Blockwise Distribution of Population in
Cooch Behar District (1981 Census)

Name of Blocks	Total Population	Density of Population (per km²)
Cooch Behar I	202759	546
Cooch Behar II	202142	543
Tufanganj I	161631	484
Tufanganj II	121833	na
Dinhata I	186726	648
Dinhata II	151637	566
Sitai	69395	443
Mathabhanga I	139050	431
Mathabhanga II	138206	440
Sitalkuchi	125633	480
Mekhliganj	98656	338
Haldibari	73993	369

Source: i) Technical Report, Series D No.33, Central Ground Water Board,1983,pp.6.
ii) District Block Profile, Cooch Behar 1989-90,Bureau of Applied Economics & Statistics, Government of West Bengal.

Table 3.2

Police Station-wise Distribution of Population in
Cooch Behar District (1981 Census)

Name of P.S.	Total Population	Rural Population	Urban Population	Number of Villages	Number of Towns
Haldibari	73975	66845	7130	62	1
Mekliganj	103268	98734	4534	152	1
Mathabhanga	290380	279327	11053	195	1
SitalKuchi	125710	125710	...	70	...
Cooch Behar	467419	387318	80101	260	2
Tufanganj	288370	283464	4906	127	1
Dinhata	353149	338613	14536	249	1
Sitai	69372	69372	...	53	...
Total	1771643	1649383	122260	1168	7

Source : District Census Handbook, Cooch Behar, 1981,pp.9.

From the tables it is seen that Cooch Behar is a predominantly rural district and that 93.10% of its population live villages with highest concentration of rural population under Cooch Behar P.S. The urban population in the district is as low as 6.90% as against 26.47% for West Bengal State.[18] Literacy rates were 30.10%(total), 40.09% (males) and 19.43% (females), all of which are a good ten percentage points below the corresponding State figures. The population composition is heavily dominated by the Scheduled Castes with their percentage standing at 49.84% against 21.99% for West Bengal.

The two principal communities in the district are Hindus and Muslims with a percentage ratio of around 80:20. The high percentage of Scheduled Castes is dominated by the Rajbanshis believed to be of Koch tribal origin who were eventually Hinduised, although scholars seem to have been divided in their opinions as to this.[19] The other SC segments comprise Namasudra and other SC communities. Scheduled Tribes are negligible at 0.57%[20] comprising vestigial groups of Rabhas, Oraons etc.

A separate table, below, shows decennial growth of population since 1901:

Table 3.3

Decadal Variation of Population in
Cooch Behar District (1901-1991)

Year	Population	Decadal Variation	% Decadal Variation
1901	565116	na	na
1911	591012	25896	4.58
1921	590599	-413	-0.07
1931	589053	-1546	-0.26
1941	683703	94650	8.43
1951	668949	-14754	-2.15
1961	1019806	3350857	52.45
1971	1414183	394377	38.67
1981	1771643	357460	25.27
1991(p)	2158169	386526	21.81

Source: i) Technical Report, Series D No.33,Central Ground Water Board,1983,pp.7.
ii) District Census Handbook, Koch Bihar, 1981,pp.xiii.
iii) Census, 1991: Provisional data in Demographic Diversity of India, Ashish Bose,pp.379.

High percentages of inter-decadal variations during the 50s & 60s partly reflect population transfers in the post-partition period; Cooch Behar which shares its southern border with what is now Bangladesh received a large proportion of this.

Table 3.4

Occupational Categories in the Population
of Cooch Behar & West Bengal

(percentage to Total Population)

	Total		Males		Females	
	West Bengal	Cooch Behar	West Bengal	Cooch Behar	West Bengal	Cooch Behar
Main Workers	28.26	28.99	48.72	52.96	5.81	3.36
Marginal Workers	1.91	0.81	1.58	0.67	2.26	0.96
Non-Workers	69.83	70.20	49.70	46.36	91.93	95.68

Source: District Census Handbook, Koch Bihar, 1981,pp.xiii.

Table 3.5

Break-up of Main Workers by Activities on Cooch Behar

	Total		Male		Female	
	West Bengal	Cooch Behar	West Bengal	Cooch Behar	West Bengal	Cooch Behar
Cultivetor	29.76	52.02	31.40	54.29	14.67	13.72
Agricultural Labourers	25.23	27.24	23.69	26.58	39.43	38.37
Household Industries	3.52	2.01	3.09	1.43	7.58	11.78
Other Workers	41.49	18.72	41.82	17.68	38.40	36.10

Source: District Census Handbook, Koch Bihar, 1981,pp.xiv.

The second table above provides indication of the occupational distribution in the district; the agricultural segment dominates the distribution. Percentage figures for the occupational distribution of main-workers for the State are also tabulated for comparative purposes. Insofar as the economic segments of the district's population are concerned, the percentage distribution between all workers and all non-workers is in the ratio 29.80:70.20 (total); 53.63:46.36 (males) and 4.32:95.68 (females). Of the total workers, marginal workers account for negligible percentages of 0.81% (total), 0.67% (males) and 0.96% (females). It is thus seen, that in reference to the State of West Bengal the worker:nonworker ratio is better for males and worse for females. Moreover, fewer male workers in the district fall into the category of marginal workers and more into the category of main workers than in the State. Cooch Behar "did not have a class of landless agricultural labour as in other districts. Each cultivating family had at least some land for itself and in addition served on the lands of the nearby jotedar or bigger cultivator. With the influx of a large number of migrants since 1950-51 a small class of agricultural labour has grown up".[21]

For females the opposite picture prevails over all categories. The underlying reason is obviously that with the rural-oriented district economy, more absorption opportunities exists for males in agricultural occupations. Furthermore, the cultivator class of main workers is much higher for the district than for the State in percentage terms and thus rural employment is in general higher, at least for males. Because of the lack of industry in the district, this occupational pattern remains more or less stable, with little growth of employment opportunities outside. Lower literacy rates compared to the State are also a factor.

3.3 Pedology & Climate

With its riverine topography and lack of high elevations, Cooch Behar presents a more homogeneous soil profile than is usual for an area of its magnitude. "Soils in the district are mostly alluvial soils ranging from sandy soil to a clayey loam, the sandy loam being prevalent in the district. In the north eastern corner of the district, i.e., in Tufanganj block, brown forest soils are found to occur in the higher altitudes.

The alluvial soils in the district are relatively shallow in depth, light texture and highly porous. With leaching of the bases brought about by heavy rainfall, these soils are acidic (ph4.2-6.2) and organic matter is not properly decomposed. The status of organic matter, available phosphate and potash is medium to high. The acidity in the soil is removed by the addition of measured quantities of dolomite/limestone, which is locally called 'soil-conditioner'. The Brown Forest soils have high fertility status, but crop yield in them is poor due to low soil depth, high acidity and low temperature".[22]

Soil depths are normally "low ranging from 15-100cm, super-imposed on deep beds of sand. The base is igneous and/or metamorphic rocks lying at depth of 1000-1500 meters. The moisture retentive capacity of land in higher situations is low with much less fertility. The lower situations are more fertile while in the middle-order land, multiple cropping has gained popularity. With assured irrigation facility these lands can be better utilised for crop production. Out of the total cultivated land 5.7% is low land 15% high land' and the rest medium land".[23]

"Unlike the adjoining district of Jalpaiguri, Koch Bihar district has only about 5,321.6 ha of forests, which covers only 1.515 percent of the geographical area of the district. Most of these forests are concentrated in the northern half of the district. Tufanganj block has the maximum area of 2,188.08 ha under forests while the blocks of Haldibari, Sitai and Dinhata II have no forests at all. These forests are moist deciduous and the most common and valuable tree is the Sal(Shorea robusta). Bamboos and Champa trees are also associated Sal forests. Rauwolfia serpentina occurs as shrubs in the district".[24]

Cooch Behar district has a moderate humid climate in a mean temperature range of 8°C(January) and 37.8°C(August) with heavy rainfall. The average annual rainfall in the district is about 3200 mm, nearly 93% of this is received between April-September. Pre-monsoon showers starting in February gradually go on increasing till the advent of monsoon.[25] Atmospheric humidity reaches a maximum 100% between May-September during the monsoon; in winter this fall but is never below 50%. Average rainfall data for 50 years between 1901-1950 are tabulated below.

Table 3.6

Mean-Monthly Rainfall of the District of Cooch Behar (1901-50)

Stations	Jan	Feb	Mar	Apr	May	Jun	Jul	Aug	Sep	Oct	Nov	Dec	Annual
Sadar	7.6	19.8	38.9	156.2	426.7	833.9	747.8	580.1	591.8	191.3	10.2	3.3	3607.6
Dinhata	9.4	17.8	28.2	126.0	358.9	659.9	539.2	434.1	446.3	166.4	9.1	1.8	2797.1
Matabhanga	7.9	18.8	33.3	113.0	344.9	741.7	683.8	533.7	492.2	146.6	11.2	2.5	3129.4
Mekhliganj	6.1	21.1	33.5	101.6	294.6	663.2	650.0	566.2	470.7	158.7	12.5	2.8	2981.0
Tufanganj	8.4	21.3	37.6	160.8	428.0	808.5	726.7	530.9	573.8	181.1	11.4	3.1	3491.6
Koch Bihar	7.9	19.8	34.3	131.5	370.6	741.4	669.5	529.0	514.9	168.8	10.9	2.7	3201.3

Source : District Gazetteers, Koch Bihar,1977,pp.21.

Table 3.7

Average Rainy days in the Cooch Behar District (1981-50)

Stations	Jan	Feb	Mar	Apr	May	Jun	Jul	Aug	Sep	Oct	Nov	Dec	Annual
Sadar	0.6	1.6	2.4	7.5	15.3	19.8	19.2	17.5	16.1	6.1	0.7	0.2	107.0
Dinhata	0.8	1.6	2.2	6.7	14.5	18.2	16.9	15.1	14.2	5.5	0.5	0.1	96.3
Matabhanga	0.6	1.7	2.3	6.4	14.1	18.5	18.3	17.3	15.0	5.5	0.6	0.2	100.5
Mekhliganj	0.6	1.5	2.1	5.8	12.9	18.2	18.5	18.1	15.4	5.0	0.6	0.2	98.9
Tufanganj	0.7	1.8	2.6	8.0	15.9	19.8	19.0	16.6	15.9	6.2	0.7	0.2	107.4
Koch Bihar	0.7	1.6	2.3	6.9	14.5	18.9	18.4	16.9	15.3	5.7	0.6	0.2	102.0

Source : District Gazetteers, Koch Bihar,1977,pp.21.

3.4 Land-Use Characteristics

Cooch Behar is a primarily agricultural district with an economy mainly deriving from agricultural activity. Except for some tea in the northern areas, and wood and tobacco the district does not have any other big industry worth the name. In the absence of significant forest tracks more than 68.34%[26] of the district's land area is under cultivation. Land-use dynamics in the district over the current century can be understood from the figures in a table below.

Table 3.8

Land Utilisation Statistics in Cooch Behar

(Areas in acre)

	1981-82	1949-50	1986-87
1. Geographical Area (Excluding Enclaves)	836480	820600	826252
2. Area under non-agricultural Use	na	na	170768
3. Forests	9845	15400	13012
4. Barren & Unculturable Land	127299	75100	35264
5. Permanent Pastures & other Grazing Land	na	na	447
6. Area under Orchards,Plantation & Miscellaneous Trees	na	na	25540
7. Culturable Waste Land	180776	130200	820
8. Fallow & Other than Current Fallow	na	na	3920
9. Current Fallow	102110	160500	na
10. Net area available for Cultivation	488441	439400	569866
11. Area Sown more than once	na	na	542627
12. Gross cropped Area	na	na	1111693
13. Cropping Intensity in %	na	na	195

Source: (i) Annual Plan on Agriculture,1986-87,Cooch Behar,
(ii) District Gazetteers,Koch Bihar,1977,pp.62.

Table 3.9 below is a summary picture of changes taking place in the land-use pattern starting at the turn of the century till the time of accession, supplemented by figures drawn from the decade just passed.The more recent figures in the table afford an indication of multiple-cropping trends through study of cropping intensities. Blockwise/subdivisionwise land-use characteristics are also provided

in the next table which highlights the distributional aspects of the district's land-use patterns (land areas in enclaves within Bangladesh territory have however been left uncovered in the official statistics):

Table 3.9

Land-Utilisation in the District of Cooch Behar 1901-02 to 1964-65 ('000 acres)

Year	Area not Available for Cultivation	Other Uncultivated Land excl. Fallow	Current Fallows	Net Area Sown	Doubled Cropped
1881	157.4	162.5	na	477.4	na
1901-02	127.2	180.7	102.1	408.4	16.5
1949-50	90.5	130.2	107.5	439.4	21.3
1950-51	102.1	124.9	92.9	500.7	72.0
1951-52	102.5	104.9	66.7	549.3	88.0
1952-53	108.6	118.0	64.1	532.7	82.0
1953-54	111.1	105.8	38.2	569.3	87.5
1954-55	110.6	105.3	66.7	548.8	89.0
1960-61	112.9	67.0	42.8	600.7	84.5
1961-62	112.9	66.2	23.7	620.6	112.3
1962-63	113.0	64.9	14.3	631.2	110.0
1963-64	107.0	58.2	5.0	653.2	171.1
1964-65	107.0	58.9	9.0	648.5	170.2

Source : West Bengal District Gazetteers, Koch Bihar,pp.63.

Table 3.10

Blockwise Land Utilisation Statistics in Cooch Behar District

(Area in ha)

Block Name	Land Area	Non-Agricultural Area	Forest Area	Barren Area	Pasture	Plantation Area	Culturable Waste	Fallow	Net Cultivable Area
Cooch Behar I	37204	12073	92	na	49	471	330	310	23899
Cooch Behar II	36105	15159	1921	352	32	100	422	30	18789
Tufanganj	57344	8208	2161	na	na	6255	na	816	39904
Total Sub-Division	131353	35420	4174	352	81	6826	752	1056	82592
Dinhata I	28692	4706	20	na	na	92	97	na	23777
Dinhata II	26445	6179	na	na	na	1000	640	na	18622
Sitai	15488	4895	na	2000	na	401	na	40	8152
Total Sub-Division	70625	15780	20	2000	na	1493	737	40	50555
Mathabhanga I	31860	7001	558	na	na	402	840	na	23059
Mathabhanga II	31020	200	136	11321	na	667	363	40	18293
Sitalkuchi	25856	2459	60	60	40	42	640	351	22210
Total Sub-Division	88736	9654	754	11381	40	1111	1843	391	63562
Mekhliganj	28351	3692	320	544	na	882	na	na	23413
Haldibari	14948	4591	na	na	60	28	na	na	10269
Total Sub-Division	43799	8283	320	544	60	910	na	na	33612
Total District	334513	69137	5268	14277	181	10340	3332	1587	230391

Source : Annual Plan on Agriculture,1986-87,Cooch Behar,pp.17.

Sub-divisional classifications in the table above are by agricultural rather than civil sub-divisions. A comparison, between sub-divisions of the ratio of sub-divisional land-area: district land-area against the corresponding sub-divisional net cultivable land-area: net cultivable land-area for the district enables identification of subdivisional potential for land development. Minor percentage variations do exist between the two ratios over the sub-divisions of Cooch Behar(39% against 35%), Mathabhanga(26% against 27%) and Mekhliganj(13% against 14%); in the case of Dinhata sub-division the two ratios are identical at 21%. These sub-divisional characteristics point to Cooch Behar and Dinhata as being relatively more agriculturally-developed sub-divisions with more intensive land-use; the converse applies to Mathabhanga and Mekhliganj sub-divisions.

Other relevant statistics which bring out the comparative features of land-use patterns are as follows. The pattern of ownership distribution of land-holdings in Cooch Behar reveals the following informations.

Table 3.11

Ownership Distribution of
Holdings in Cooch Behar

Holding Size	% to Total Holding	% to Total Area
Below 1 ha	51.99	41.40
1-2 ha	26.39	31.70
2-4 ha	12.20	21.50
Above 5 ha	9.42	5.40

Source : Annual Plan on Agriculture,Cooch Behar,1986-87.pp.7.

Following the recording of share-croppers or bargadars under 'Operation Barga' since 1978 (according to the office of the Bengal Land Reforms[BLRO] patta, which means the acceptance of share-croppers' right to operate a particular piece of land) changes in land distribution have taken place throughout the State in West Bengal, and the position as of November 1990 in Cooch Behar district is that the land-rights of 80,990[27] bargaders have been registered over an area of 33,060[28] ha in Cooch Behar district. In percentage terms this works out to 5.68% and 7.51% of the State achievement, respectively.

Recording of Bargaders in Cooch Behar
& in West Bengal

Name	Number	Land Area
Cooch Behar	80,99,000	33,06,000
%	(5.68)	
West Bengal	14,26,69,000	440,31,000
%	(7.51)	

The percentage of cultivable area to total area for the State of West Bengal is 62.44% as against 76.05% for Cooch Behar; of this area 97.31% is sown for West Bengal as against 99.73% for Cooch Behar. The ratios of cultivable area per agricultural worker and net area sown per agricultural worker are 0.65 and 0.63, respectively, for West Bengal and 0.64 and 0.64, respectively for Cooch Behar. Higher ratios of the order of 0.67-0.83 obtained for the other North Bengal

districts of Malda, West Dinajpur (now divided into North & South Dinajpur) and Jalpaiguri, although the ratios for the adjoining Darjeeling district (excluding its hill sub-divisions) are lower at 0.58.[27]

Table 3.12

Land Area & the Land-Use in North Bengal

(1982-83 to 1986-87)

District	% of cultivable Area to Total Area	% of Net Area Sown to Cultivable Area	Cultivable Area Per Agricultural Worker	Net Area Sown Per Agricultural Worker
Malda	78.73	96.89	0.69	0.67
West Dinajpur	87.86	99.27	0.80	0.80
Cooch Behar	76.05	99.77	0.64	0.64
Jalpaiguri	47.17	99.41	0.83	0.83
Darjeeling	74.61	99.73	0.58	0.58
West Bengal	62.44	97.31	0.65	0.63

Source : Economic Review 1990-91,Government of West Bengal,pp.211.
Note * Agricultural workers used as per Census,1981 ** Current Fallows plus net area sown.

In an agriculture-dependent district with high agricultural bias in the occupational distribution these ratios are bound to be high, in consideration of lack of alternative employment opportunities. However, density factors have to be considered to establish beyond doubt that the ratios reflect crowding on land *per se* rather than non-availability of cultivable land because of high proportions of non-cultivable land. In Cooch Behar, as compared to Jalpaiguri for example, population density/km^2 is 523 against 346. Thus the ratios of cultivable area and net area sown per agricultural worker, which in the case of Jalpaiguri stand at 0.83, are substantially lowered for Cooch Behar at 0.64. Although a very high proportion of main-workers in Cooch Behar are engaged in agricultural occupations, this does not mean that they are gainfully employed; productive use of these main-workers dictates increases in cropping intensities for increased labour-absorption.

3.5 Cropping

The principal crops cultivated in the district are:

a. paddy of three kinds,aus,aman and boro
b. jute of two varieties, the capsularis and the oliotaris
c. tobacco
d. rape seed and mustard seeds
e. pulses - mug, masur, khesari, thakri, kulti, arahar
f. wheat
g. millets
h. Indian corn (makai)
i. roots and bulbs - mainly arum and potato, but also onion, garlic, ginger and turmeric
j. other fibre plants and matting grass
k. vegetables from market garden such as cauliflower, cabbage and chilli.

These are sown over four main cropping seasons, namely, boro (February-May), pre-kharif (March-June), kharif(June-September) and rabi(October-January). Paddy being the main cereal crop, sowing in the district is of the two traditional varieties aus and aman in addition to boro paddy which is a relatively a new introduction since it was previously a marginal crop in the marshlands or bils.[30] Two principal commercial crops are tobacco and jute with the former being concentrated mostly in Dinhata I, Sitai, Sitalkuchi and Mathabhanga I & II. Tobacco has the advantage of being cultivable on sandy land of poorest quality and Cooch Behar alone supplies about 72% of the total tobacco output of West Bengal. Following a concerted agricultural thrust all over the State, the response of Cooch Behar district has seen a visible shift to HYV varieties, along with increased fertiliser and pesticides use. Fertiliser consumption, for example, has increased from 1.82 kg/ha in 1971-72 to 15.09 kg/ha in 1985-86, most of this thrust coming in the period since the late 70's. In physical terms, the total quantity of fertilisers has jumped from a consumption of 831 MT in 1971-72 to 27,584 MT in 1988-89 for the district as a whole. The table below will help to define Cooch Behar's place vis-a-vis certain other districts and West Bengal as a whole, through comparison of index numbers of agricultural production and area productivity.

From the table below it can be seen that increase in area cultivated for Cooch Behar district is fairly creditable in the case of both cereals and all crops combined vis-a-vis the other districts. In comparison to the AllState figure, too, the index numbers for total cropped area for Cooch Behar district are creditable and above-average, although no comment can be made with a response to cropping of cereals because of the paucity of the corresponding State figures in aggregated terms. Cooch Behar also shows better performance particularly in cereals-acreage in comparison to other North Bengal(NB) districts, as well as to the agriculturally-progressive South Bengal(SB) district of Burdwan. Purulia, being one of the poorest SB districts, obviously trails behind. The reasons behind Cooch Behar's performance are manifold. A high ratio of cultivable land to total land, the presence of a settled agricultural population with no significant tribal component, favourable soil and climatological characteristics are some of them. However in the absence of any significant proportion of cultivable land presently given to non-agricultural use, the increase in area cultivated in Cooch Behar is primarily the result of multiple-cropping; this is borne out by another reference to the earlier tables pertaining to the land utilisation in the district where the long-term decline in all fallows (current & other) and increases in double-cropped area, as well as increased cropping intensity tell the tale. However, this situation also ordains the future prospects of agriculture in the district. With the lack of scope for expanded acreages along the extensive margin, successful development of agriculture has come to depend increasingly on intensified cultivation, for which irrigation and other facilities are pre-requisite.

Fortunately, scope for this exists; production and productivity levels in Cooch Behar are yet to attain the levels reached by the progressive agricultural districts of the State. In view of the fact that agricultural modernisation and the use of irrigation and other technological inputs are relative newcomers to Cooch Behar, significant results await an agricultural thrust in the right direction. However the economic future of Cooch Behar's population cannot be divorced from the development of agriculture in the near future - it

is utopian to talk of an industrial solution to the district's backwardness, especially when the resource-base and the human factors therein all point to its innate agricultural potential.

Table 3.13

Agricultural Area,Production & Productivity
in some Districts of West Bengal

(Index Numbers: Base:Triennium ending Crop Year 1969-70=100)

District	Year	Area		Production		Productivity	
		Cereals	AllComb	Cereals	AllComb	Cereals	AllComb
Cooch Behar	1987-88	115.55	113.41	111.77	117.12	96.73	103.27
(NB)	1988-89	134.33	128.44	138.68	143.07	103.24	111.39
	1989-90	128.11	124.38	145.69	146.97	113.72	118.16
West Dinajpur	1987-88	103.53	102.70	107.07	106.45	103.42	103.65
(NB)	1988-89	105.55	101.94	136.27	138.30	129.10	135.67
	1989-90	101.83	97.26	162.09	155.24	169.18	159.61
Jalpaiguri	1987-88	112.00	113.99	106.45	132.10	95.04	115.89
	1988-89	113.26	114.43	99.37	130.02	87.46	113.62
	1989-90	112.97	112.73	112.10	139.52	99.23	123.76
Burdwan	1987-88	113.80	123.25	157.94	196.38	138.79	159.33
(SB)	1988-89	108.06	116.34	177.68	213.71	164.43	183.69
	1989-90	108.80	116.57	173.52	207.62	159.49	178.11
Purulia	1987-88	103.38	103.28	151.64	148.56	146.68	143.84
(SB)	1988-89	100.30	99.45	131.73	131.03	131.34	131.75
	1989-90	104.69	103.98	154.63	153.48	147.70	147.61
AllState	1987-88	na	109.85	na	159.07	na	144.81
	1988-89	na	108.75	na	177.25	na	162.99
	1989-90	na	109.80	na	182.96	na	166.63

Source: Economic Review,1990-91,Government of West Bengal,pp.41-45

* NB:North Bengal SB:South Bengal

3.6 The Irrigation System

That irrigation perspectives in Cooch Behar have changed substantially in recent times is obvious from the tangential and sometimes contradictory comment in the older sources. Hunter records that "irrigation is not common in Kuch Behar".[31] Another source remarks about the district that "for irrigation it depends entirely on its heavy rainfall", and elsewhere that "irrigation is not common, although tobacco plants both in the nursery and in the field are watered.Aman paddy, requires water, which the monsoon supplies. The rain water is contained in the ails around the fields. Although artificial means of keeping up or assisting the productive power of the soil, such as manuring and irrigation are not much adopted, the natural fertility of the soil is great".[32] The Gazetteer[33] reports : "the rainfall in the district being quite heavy and well distributed

the cultivator hardly needs artificial irrigation for his crop occasionally during the tobacco season in winter the accumulated waters are lifted by dons for irrigating tobacco-fields". Later the Gazetteer [34] comments "while the average annual rainfall in the district is heavy, the occurrence of dry spells during the crop seasons is not less frequent than other floods. For assured crop production, therefore, arrangement for additional irrigation devices both during rabi and kharif cultivations is necessary". It states that with the command area of existing irrigation units being very limited, "changes in the water transmission system as also in the technique of application of water to crops may help improve the situation".[35] Although the district does not experience droughts in their true sense, large fluctuations in river levels during and after heavy precipitation are reported.[36]

Such large-scale development in irrigation facilities as is exhibited by the district in recent years follows under the Accelerated Food Production Programme (AFPP) launched by the State Government since the mid-'70s with assistance for their irrigation component being extended through the Command Area Development Programme (CADP) with World Bank support. As a result percentage of gross cropped area of the district having access to irrigation expanded from an estimated 5%[37] to 10.26%[38] between the years 1974-75 & 1985-86.

Irrigation facilities at present are inadequate. Two tables below give some idea of the irrigation profile of North Bengal by districts:

Table 3.14

Cultivable Area & Irrigation Potential in North Bengal

District	Area (Sq.km.)	Net cultivated Area(ha)	Net Irrn. Potential Created	% of Irrigated Area
Malda	3773	280850	69000	24.56
West Dinajpur	5358	395984	81637	20.62
Cooch Behar	3387	230391	39500	17.14
Jalpaiguri	6227	225676	35441	15.70
Darjeeling	3149	66871	20086	30.03

Source: Conference on Regional Development of North Bengal ' Prospects & Potentials Background Paper,1986,Government of West Bengal,pp.32.

Table 3.15

Gross Cropped Area & Cropping Intensity in North Bengal

District	Gross Cropped Area (ha)	Cropping Intensity
Malda	414838	161
West Dinajpur	609796	153
Cooch Behar	452358	196
Jalpaiguri	400169	179
Darjeeling	112476	168

Source:Conference on Regional Development of North Bengal Prospects & Potentials Background Paper,1986,Government of West Bengal,pp.32.

Cooch Behar, with a predominantly agricultural economy and little forest cover, still scores relatively low among the North Bengal districts in terms of percentage of area under irrigation (the percentage figures here are for net rather than gross cropped area). It does "appear paradoxical that inspite of inadequate irrigation facilities in the area, cropping intensity for different districts compares favourably with the rest of the State....relatively high rainfall and low monthly potential evapo-transpiration [because of high humidity] contribute towards retaining the favourable trend. Moreover soil moisture is contained for a considerable period even after the departure of monsoon".[39] Despite these high cropping intensities productivity indices are not very remarkable for Cooch Behar Table 3.15.

In the face of the overwhelming dependence of the district's economy on agriculture and the backwardness that this exhibits, two alternative development prescriptions might theoretically emerges. The first is the long-term and somewhat utopian one of the giving Cooch Behar's development an industrial underpinning. The more practical prescription, however, would be to exploit the natural advantage inherent in the district's primarily agricultural complexion and to concentrate on injection of a technology-induced transformation of traditional agriculture. The merits of such an approach are that no immediate disruption need take place in Cooch Behar's occupational profile, while its importance as a feeder of agriculture produce to the State can be expanded overall, just as is already evident in the case of tobacco cultivation. New technology in agriculture however demands substantial input of fertilisers, pesticides and improved seeds, in which irrigation plays a complementary role. In the case of Cooch Behar the need for expanded irrigation has been brought out by the foregoing discussion. Focus now moves on to whether the potential for this exists in the district or not.

3.7 Groundwater

Groundwater in Cooch Behar district occurs "under both water table and confined conditions in aquifers which range in depth from about 2 to 303 meters below ground level (m.b.g.l.) .... the water table varies with the topography and becomes steeper towards the northern side....with the onset of monsoon, the water levels gradually tend to rise and ultimately reach a level beyond which there is no further rise. At this stage, the system has reached its saturation point and after this, rainfall does not have any appreciable effect on the hydrogeological set-up; whatever rainfall is received after this saturation point, is thrown off by the system as surface run-off and practically none of it percolates down into the groundwater reservoir as recharge. It has been observed that the saturation point is reached sometime in late August. As the monsoon ceases, this process is reversed and the water levels start declining with the onset of summer. Withdrawal of groundwater from dugwells and tubewells have not in any way changed the groundwater regime in the district".[40]

Groundwater in Cooch Behar is a renewable resource subject to periodic replenishment from:

"i) direct infiltration from precipitation, and
ii) infiltration from streams and rivers flowing across the district".

Besides rainfall which is the principal source of recharge for the aquifers, "seepage from existing canals or streams and rivers and return flow of irrigation water forms the other sources of recharge".[41]

The main utilisation of groundwater in the district is for agriculture apart from the very small percentage that represents domestic drawal. However "utilisation of groundwater for agriculture and irrigation has not attained its optimum level in any part of the district.... considering the appreciable amount of recharge received annually through rainfall, the withdrawal of groundwater has been negligible which leaves a tremendous scope for further large scale development of water".[42] Some idea of the groundwater potential is available from data relating to water drafts of various source of irrigation." Yield tests conducted on tubewells in the district have shown that the tubewells, in general, if suitably constructed are capable of yielding 160-220m^3/h for drawdowns varying from 1.08-9.94m. Medium duty irrigation tubewells in the district generally yield between 22.7 and 45m^3/h. Dugwells, tapping the shallow aquifers in the district can normally yield upto about 500m^3/d".[43]

Groundwater drawings throughout the district of Cooch Behar exhibit characteristics ranging from slightly acidic to slightly alkaline in the ph-range of 6.5-7.8, and are suitable for both domestic as well as agricultural purposes. Chemical analysis reveals chloride content of 3-105ppm (parts per million) and a relatively high bicarbonate content of 20-510ppm. Iron content is somewhat excessive, specially in localised pockets, in a range of 0.04-10.2ppm. This occasionally may call for treatment prior to the release of water for potable purposes. Fluoridation in the water is however within permissible limits at 0.12-0.37ppm. In the monsoons, because of dilution, chemical concentrations are somewhat reduced. No appreciable variation in this composition is found between higher-strata and lower-strata drawings i.e. between dugwells and tubewells. As such chemical constitution of groundwater throughout Cooch Behar district falls within the safety standards laid down for drinking water by the Indian Council of Medical Research in 1975.[44]

The detailed technical report on the irrigation potential of Cooch Behar district by the CGWB, Ministry of Irrigation, Govt. of India provides a wealth of technical information on the hydrogeology of the region, which has significant bearing on any irrigation study. Assessment of the available groundwater potential has been made on the general lines of the 'water table fluctuation approach'.[45]

Annual estimates of exploitable groundwater balance in the aquifers comprising the groundwater system of Cooch Behar district are based on computed monsoon and non-monsoon recharges net of the annual existing ground water draft. For each block, recharge during the monsoon period (A) is computed by the following formula :

A = [Block-area(km^2) x
Yearly average seasonal watertable fluctuation(M) x
Average specific yield(%)] +
[Net monsoon pumpage (MCM) -
Seepage from surface irrigation systems(MCM)] x
Proportion of annual rainfall falling in the monsoon period +
Seepage from surface irrigation systems (MCM)

(MCM = Million Cubic Meters)

Blockwise recharge during the non-monsoon period (B) is estimated by :

B = Rainfall recharge from non-monsoon rains +
Seepage from surface irrigation systems (MCM)

Average specific yield in A, above, is assumed to be around 15%, which represents the limits of accessibility to tappable groundwater structures imposed by technology. The rainfall infiltration factor for the district is estimated to be 25%, with 75% of rainfall being lost through surface run-off.

Net annual groundwater recharge (C) is thus the total of monsoon and non-monsoon recharge, of which 30% is assumed to be irrecoverable due to evapo-transpirational losses etc., leaving 70% as the groundwater potential (created by natural recharge) available for irrigation/domestic use.

Of this groundwater potential, existing groundwater draft comprises drawings for agricultural, domestic & industrial purposes that are already being made. Groundwater draft(D) is thus given by:

D = [Existing annual agricultural draft -
Seepage from surface irrigtion systems (MCM)] +
Existing annual domestic and industrial draft (MCM)

Once again, assuming a loss-factor of 30% as above, 70% of this existing annual draft constitutes present drawings. Thus the ground water balance available for development(G) is estimated; for each block, by:

G = Net annual recharge(C) - Net annual draft(D)

The three tables below provide blockwise estimates of the above hydrogeological measures.

Table 3.16

Blockwise Estimation of Annual Recharge & Potential Available for Irrigation in Cooch Behar District

Name of the Block	Recharge during Monsoon period (MCM)	Recharge during Non-Monsoon period(MCM)	Annual Recharge (MCM)	Potential Available for Irrigation: 70% of Annual Recharge(MCM)
Cooch Behar I	103.49	69.03	173.12	121.18
Cooch Behar II	105.25	69.95	175.20	122.64
Tufanganj	283.62	79.05	362.67	253.87
Dinhata I	189.78	54.89	244.67	171.27
Dinhata II	173.29	51.27	224.56	157.19
Sitai	98.44	30.01	128.45	89.91
Mathabhanga I	122.83	43.93	166.76	116.73
Mathabhanga II	119.84	42.78	162.62	113.83
Sitalkuchi	155.14	35.50	190.64	133.45
Mekhliganj	93.14	43.26	136.40	95.48
Haldibari	73.22	29.50	102.72	71.30
Total			2067.81	1447.46

Source : Technical Report, Series:d No.33 Central Ground Water Board,1983, pp.Appendix V(c).

BLOCKWISE ESTIMATES OF GROUNDWATER POTENTIAL AVAILABLE FOR IRRIGATION AND FOR FUTURE DEVELOPMENT IN COOCH BEHAR DISTRICT.

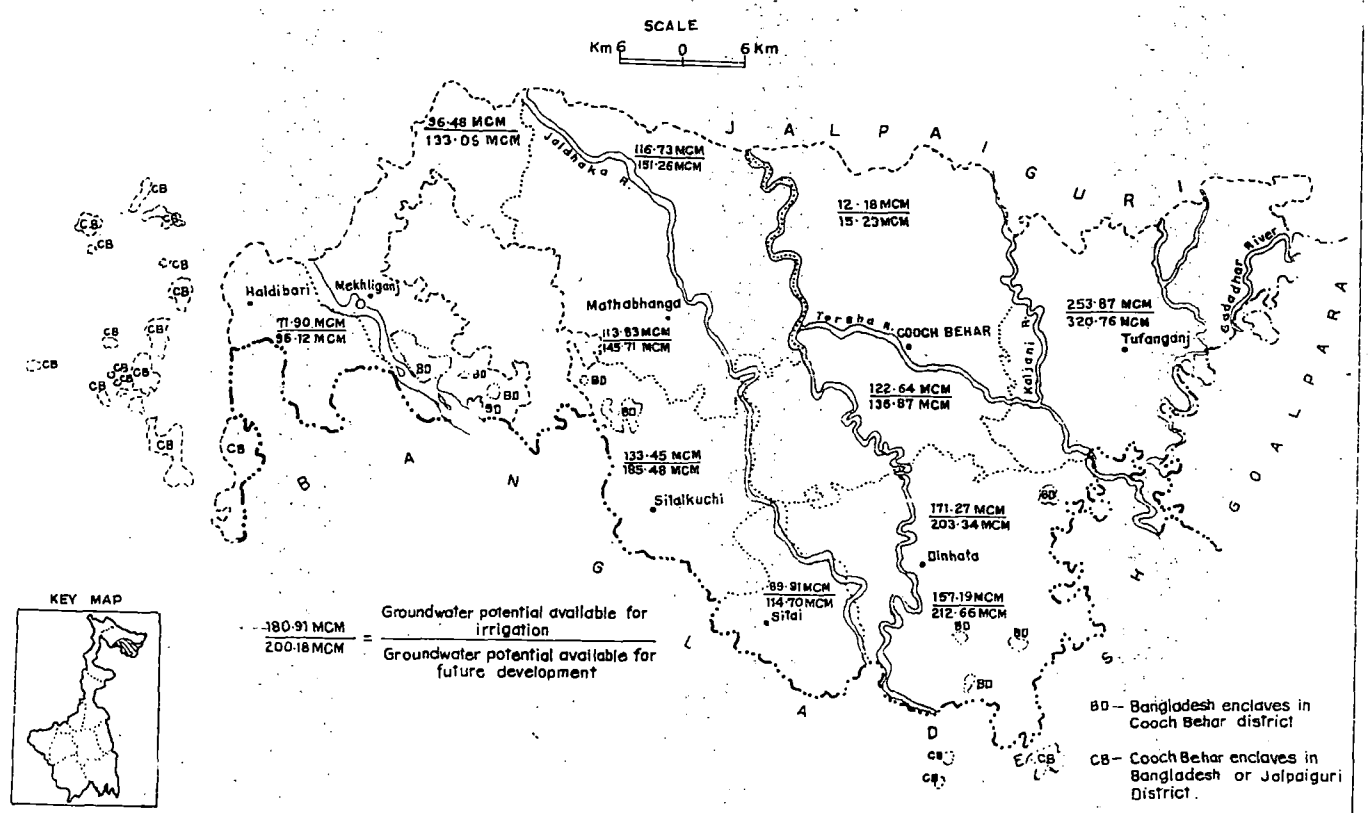

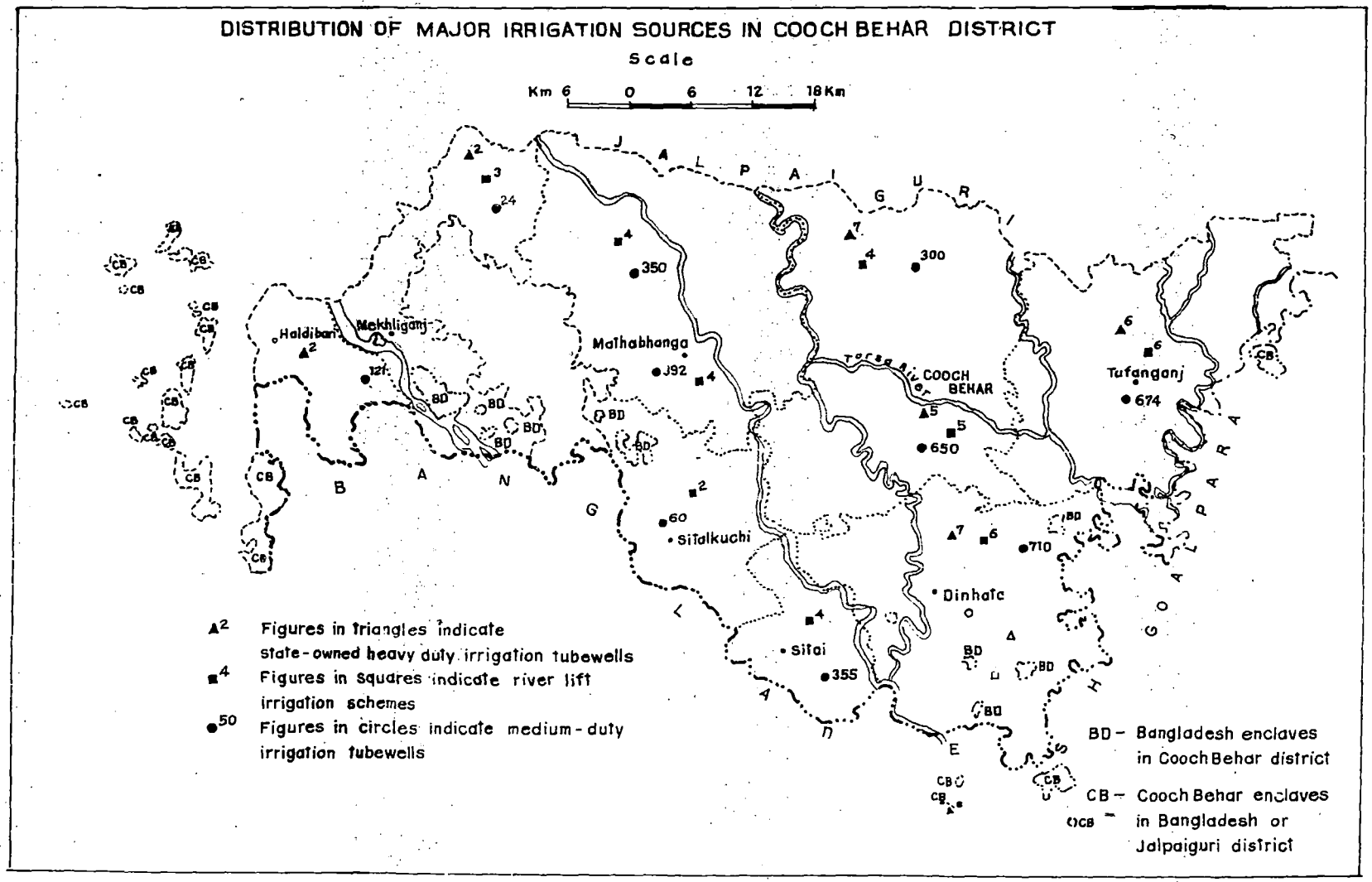
DISTRIBUTION OF MAJOR IRRIGATION SOURCES IN COOCH BEHAR DISTRICT
Scale
Km 6 0 6 12 18 Km
JALPAIGURI
BANGLADESH
GOALPARA
Haldibari
Mekhliganj
Mathabhanga
Sitalkuchi
Sitai
Dinhata
COOCH BEHAR
Tufanganj
Torsa River
▲2 Figures in triangles indicate state-owned heavy duty irrigation tubewells
■4 Figures in squares indicate river lift irrigation schemes
●50 Figures in circles indicate medium-duty irrigation tubewells
BD – Bangladesh enclaves in Cooch Behar district
CB – Cooch Behar enclaves in Bangladesh or Jalpaiguri district

Table 3.17

Blockwise Estimation of Groundwater Draft in Cooch Behar District

Block Name	Agricultural Draft(MCM)	Domestic Draft(MCM)	Net Annual Draft(MCM)
Cooch Behar I	16.34	5.55	21.89
Cooch Behar II	32.80	5.53	38.33
Tufanganj	34.16	7.75	41.01
Dinhata I	36.23	5.10	41.33
Dinhata II	7.75	4.15	11.90
Sitai	11.85	1.90	13.75
Mathabhanga I	11.69	3.81	15.50
Mathabhanga II	13.13	3.78	16.91
Sitalkuchi	1.72	3.44	5.16
Mekhliganj	0.61	2.70	3.31
Haldibari	4.58	2.02	6.60
Total			216.59

Source : Technical Report,Series:d No.33
CGWB,1983,pp.Appendix V(d).

Table 3.18

Blockwise Estimation of Groundwater Balance Available for Further Development in Cooch Behar District

Name of the Block	Annual Recharge (MCM)	Net Annual Draft (MCM)	Groundwater Balance Available for Further development(MCM)
Cooch Behar I	173.12	21.89	151.23
Cooch Behar II	175.20	38.33	136.87
Tufanganj	362.67	41.91	320.76
Dinhata I	244.67	41.33	203.34
Dinhata II	224.56	11.90	212.66
Sitai	128.45	13.75	114.70
Mathabhanga I	166.76	15.50	151.26
Mathabhanga II	162.62	16.91	145.71
Sitalkuchi	190.64	5.16	185.48
Mekhliganj	136.40	3.31	133.09
Haldibari	102.72	0.60	96.12
Total			1851.22

Source : Technical Report,Series:d No.33, Central Ground Water Board,1983, pp.Appendix V(e).

From the tables it can be seen that "the potential available in the district for irrigation is of the order of 1,447.46 MCM, while the total ground water available for development is about 1,851.22 MCM".[46]

In view of this large available resource of groundwater, it is useful to develop some idea of the order to which it has been harnessed for development. An assessment of this can be made by considering the ratio of net annual draft : net annual recharge, which is to the order of 216.59 : 2067.81 or 10.47%[47] for the district. "Thus, it may be seen that practically the entire resources of Cooch

Behar district virtually lie untapped at present, which could be suitably harnessed and utilised by application of safe and scientific principles of groundwater planning and management".[48]

The report comments that all the blocks in the district provide good scope for development of groundwater through dugwells and medium- & heavy-duty tubewells. "With the increased irrigation potential, the farmers in the district should be encouraged and persuaded to resort to multiple-cropping pattern through assured irrigation, which in turn would result in the up-grading of the economic status of the people and the district as a whole".[49] The recommendations are for drilling of more irrigation wells and setting up many more river-lift irrigation schemes on the perennial river systems. "Commercial banks and other institutional financing agencies should come forward with suitable soft-loans enabling purchase of pump-sets and other agricultural inputs by the small and marginal farmers in the district".[50]

3.8 Minor Irrigation Schemes

Agricultural draft of groundwater is accomplished through wells/borings under the categories : dugwells (mechanised and non-mechanised); shallow tubewells electrified & diesel-powered; and deep tubewells (powered alternatively by submersible/turbine pumps). In addition to groundwater sources, culturable water resources also comprise surface flow irrigation (SFI) via a system of barrages and interlinked canals) and surface lift irrigation (SLI) from proximate riverine sources. The schemewise distribution for the whole of Cooch Behar district as of 1988 is stated in the following Table.

From the table below it is evident that surface lift schemes are the primary irrigation support for the district besides traditional dugwells. However, surface irrigation schemes do not draw groundwater and are more susceptible to rainfall aberrations and fluctuating river levels. Thus the mainstay of the district's irrigation profile are shallow tubewells, which account for the bulk of the area irrigated. The computed average command area figures show a difference between STW & SLI schemes that is less than expected, keeping in mind that SLI schemes are multi-user in nature with much more capital investment and pumping capacity.

Table 3.19

Minor Irrigation Schemes in Cooch Behar,1987-88.

Scheme Category	No.of Schemes Schemes	Area Irrigated (ha)	Average Command Area/Scheme (ha)
Dugwells	3763	1706.42	0.45
STW	11331	11603.83	1.02
DTW	51	930.07	18.23
Total Ground Water Irrn.	15145	14240.32	0.94
Surface Flow Irrn.	115	210.51	1.83
Surface Lift Irrn.	1918	3214.07	1.67
Total Surface Irrigation	17178	3424.58	0.19
Total AllSchemes	32323	17665.20	0.54

Source : Compiled from data in State-Level Data Abstract, SWID, Government of West Bengal, 1988.

Discharge figures for groundwater borings, noted earlier, have shown yields of 500m^3/d for dugwells, 22.7-45 m^3/h for STW and 160-220m^3/h for DTW, under normal condition. In comparison, river lift schemes have an average yield of 200m^3/h, but a high incidence of water recycling from seepage, which in the non-monsoon period is as much as 30% of the total water diverted at the outlet of the pump.[51] Command areas, under full-rated conditions for the above schemes are from 2.02-2.83 ha(5-7 acres) per STW and 40.46 ha(100 acres) per DTW. The command area per dugwell is not available. As against the groundwater schemes, the command area for RLI schemes is rated at 52-56 ha. However, nowhere in the district does the average area irrigated from RLI exceed 26 ha. "This under-utilisation of the capacity is due to the reluctance of the farmers to take water from these schemes on payment basis and also the sandy nature of the soil which prevents large command areas".[52]

DESIGN OF THE CASE-STUDY

The foregoing discussion has fixed the importance of irrigation facilities in the development of agriculture in Cooch Behar district. Since the purpose of this research is to investigate the importance of electricity in a primarily agrarian economy, Cooch Behar provides an ideal territory for field investigation. Features of electricity distribution and consumption in the district, insofar as they pertain to the subject of study, have already been brought out in the chapter on electricity. With the high rural bias that prevails in agrarian economies the importance of electricity as a productive input may demand extension of the hitherto industry-based concepts of the productive nature of electricity; this point is often missed in perspectives on power-development over the country and the region.

In addition to the productive potential embodied in electrification of rural areas, the other more commonly recognised attribute of electricity is as a component in the improvement of the availability of life. In some sense, confinement of public and governmental attention to only this attribute gives power perspectives an unduly urban orientation that may of course be the fruit of conscious targeting of India's developmental strategies to industrialisation. At a regional level such strategies are often inequitable and lead to an exacerbation of inter-regional and rural-urban differentials. They also have been held responsible, by scholars critical of their thrust, for creating a development process that has tended to bypass the village, by and large. Mis-direction of development efforts are also held responsible for the emergence of technological dualism in countries with large agrarian populations.

Cooch Behar is an epitome of all these problems : development in the district has been tardy because of its 'no-industry' status; with its predominantly agrarian situation it has no foreseeable industrial future; and, unless development processes are tailored to its situation, the district will be bypassed in the general progress achieved by the State and the country.

Mere stress on agricultural extension may not be enough. The agrarian economy of the district gives agriculture the potential of emerging as a leading sector which can carry with it, the needs and aspirations of rural society. This inevitably entails technological intervention into traditional agricultural patterns, and at an accelerated rate.

The present study thus derives its orientation from this standpoint. Electricity is an important contributor to economic productivity; in agrarian economies this productivity can be unleashed by irrigation and by the technological adaptation of irrigation systems to increased use of electricity; perspectives on power demand and development must take cognigence of this and shed their urban-industrial biases. An approach to quantifiable assessment of the problem, as stated, is made by detailed investigation of the various economic and technological parameters that define this issue, over selected blocks of Cooch Behar district.

While field investigation was only feasible for the selected blocks themselves because of the limitations of time and circumstance, block-selection was done carefully so as to ensure a properly-representative study. Full consideration was thus given to the distinctive characteristics of the district, its subdivisions and their blocks, in th light of the information already included in the earlier sections of this chapter. The two blocks thus selected were Dinhata I, belonging to Dinhata subdivision, and Tufanganj I, belonging to Tufanganj civil subdivision but otherwise a constituent of Cooch Behar Agricultural subdivision as earlier stated. Population in Tufanganj I was 1.62 Lakhs in 1981 with a density of 497 while in Dinhata I it was 1.86 Lakhs with 652 population density. Dinhata in any case is most densely-populated block in Cooch Behar district. The population distribution has a more urban character in Dinhata I, which includes Dinhata Municipality; Tufanganj I is heavily-rural dominated. Rural:urban ratios are 31.94 for Tufanganj I and 11.84 for Dinhata I, and are indication of this.[33]

Broad features of land utilisation in these blocks are available from Table 3.10. Over the whole district these blocks constitute a more developed agricultural sample, but since the study focuses on irrigation aspects, selection was purposively directed. There is however substantial inter-block variation in the general block characteristics to regard these two blocks as constituting a heterogeneous sample.

Tufanganj lies to the north-east of the district sharing its borders with adjoining Jalpaiguri; the land border with Assam, however, now falls in Tufanganj II block, after re-constitution. To the west Tufanganj I is bordered by both Cooch Behar I & II and to the south by Dinhata II. Dinhata subdivision forms the south-eastern border of Cooch Behar which merges on the international border of India and Bangladesh; enclaves of Indian territory in Bangladesh fall under its jurisdiction. Dinhata I is the western segment of the sub-division and shares its southern boundaries with Bangladesh. To its north lies Cooch Behar II and to the west, across the Jaldhaka (or Mansai), lies Sitai.

Being in a riverine bed heavily crossed by rivulets, large variation in soil constitution are found even in as small a geographical area as the blocks in question bear reference to. Tufanganj is traversed by the Raidak and Kaljani systems; the richest black loams however lie to the east[34] in Tufanganj II block. The loam constituent in Tufanganj I soil is nevertheless higher than in Dinhata I, with a 50:50 percentage distribution between loam: sandy loam & sandy-clay loam over Tufanganj blocks I & II, together.[35] For Dinhata I sandy loam constitute 70% and loams themselves are only 30%. Clays are absent from the soil in Dinhata I,[36] pointing to low moisture-retentivity and poorer soil, which is why tobacco cultivation is more

widespread. Northern Dinhata I to the west of the old course of the Dharla is sandy; however, to the east more loams are formed under the influence of the Mansai system.[57] Highlands or dangas, are generally more sandy than the lowlands and less fertile but proper manuring can yield rich crops of tobacco, sugarcane etc.[58]

As the earlier of the available figures refer to the period before bifurcation of Tufanganj into Tufanganj I and Tufanganj II, it is difficult to ascertain the precise position of Tufanganj I from older secondary sources. However, treating Tufanganj I & II as constituting Tufanganj, some idea of variations in soil textures can be gleaned from the blockwise soil texture's chart given below.

Heavy soils comprising clays and clay loams are absent in the district. As much as 85% of land in Tufanganj (I & II) is an medium elevation, highlands constitute only 9% and lowlands 4%. The corresponding figures for Dinhata I are 81%,13% and 5%, respectively.[59] More elevational variation is found in Dinhata I, with more danga land.

Block Profile: Soil Textures

(cultivable ha)

Name of the Block	Light Sandy	Light Sandy	Medium Sandy Loam	Medium Sandy-Clay Loam
Tufanganj (I & II)	9124	19950	7090	3740
Dinhata I	3600	16640	2536	993

Source : Compiled from Annual Plan on Agriculture,Cooch Behar,1986-87,Table 1.4.3.pp.15.

Chemical constitution of soils show 87% (ph-acidic):13% (ph-neutral) for Tufanganj I & II, and 80% (ph-acidic):20% (ph-neutral) for Dinhata. Available phosphates and potash are also better in the case of Dinhata I but the difference in organic carbon constituents between Tufanganj (I & II) and Dinhata I is marginal.[60]

BLOCK PROFILES

3.10 Agriculture

Information relating to the rural situation and agriculture in the study block is presented in the tables to follow. Because of the difference between civil and agricultural administrations in Cooch Behar, it is still difficult to obtain separate figures for Tufanganj I from official statistics, hence agricultural data are presented for Tufanganj I & II as a whole.

The first table shows the distribution of rural population in Dinhata I and Tufanganj I over various agricultural classes. Differences between blocks are immediately obvious from the bracketed percentage expression. Urban populations in the two blocks have been excluded in the percentage computations - Tufanganj in any case is primarily rural with a small urban settlement administered by a municipality, whereas Dinhata I includes a larger municipal town. From the table it is seen that the marginal farmer & landless labourer segment is more predominant in Dinhata I than in Tufanganj I. Dinhata I being bordered by Bangladesh has high population density with a large component of resettled people, which accounts for this. Tufanganj has a more settled agricultural population with a larger proportion of owner-cultivators. This is corroborated by percentages of those holding pattas (permanent titles) to lands which are higher for Tufanganj. Bargadars too are numerically stronger in Tufanganj I.

Table 3.20

Distribution of Rural Population in
Dinhata I and Tufanganj I Blocks

Population	Dinhata	Tufanganj
Landless Labourers	18400	14193
%	(11.74)	(8.24)
Bargaders	2420	5220
%	(1.54)	(3.03)
Patta-holders	4921	12280
%	(2.85)	(7.13)
Small Farmers	1180	3285
%	(0.75)	(1.90)
Marginal Farmers	9353	8932
%	(5.96)	(5.18)

Source : Compiled from Block Profile, Cooch Behar 1989-90,Bureau of Applied Economics & Statistics, West Bengal.

Note

Figures available in the quoted sources are often subject to serious typographical error and need to be corrected before use as has been done here]

Definitions:

Small Farmer : Cultivator with landholding less than 2ha or class I irrigated land less than 1ha.,

Marginal Farmer: cultivator with landholding less than 1ha or class I irrigated land less than 0.5ha.,

Agricultural Labourer : person with no land other than homestead and drawing 50% income from agriculture.

As earlier noted land & soil conditions are better in Tufanganj I than in Dinhata I, even though the latter has the bigger stake in the major cash-crop of the district i.e. tobacco. Dinhata I, therefore, represents an agriculturally less-endowed block where Tufanganj I is comparatively better off. This difference provides a useful frame of reference for the sample study.

The table below brings out the relative positions of Dinhata I and Tufanganj I & II (combined) in respect of their agricultural patterns. Yield figures are also provided for Cooch Behar district although they pertain to an earlier year for which data were available. Comparison of block yields with district yields does show the blocks to be better in most cases, with differences being large enough, usually, to nullify potential errors in comparing figures for disparate years. Howeveg a glaring opposite is found in boro paddy (which is completely irrigation-dependent) for which the block yields tend to be low; so also for wheat.

Figures for cropping production and yields are shown in table below.

Table 3.21

Area, Production and Yields of Principal Crops in Dinhata I and Tufanganj (I & II) Blocks 1984-85

	Area(ac)		Production (MT)		Yield(kg/ac)		
	Dinhata	Tufanganj	Dinhata	Tufanganj	Dinhata	Tufanganj	Cooch Behar
Aus Paddy	26895	49913	9682	20214	360	405	297
Aman Paddy	29470	86352	17181	46457	583	538	489
Boro Paddy	373	4369	383	4277	1028	979	1261
Jute	12232	2164	6429	1097	525	507	468
Wheat	7297	12628	5253	7041	720	558	742
Mustard	1727	7133	305	1569	177	220	na
Potato	1413	2581	4807	9188	3402	3560	3390

Source : Compiled from Block Profile, Cooch Behar 1989-90,Bureau of Applied Economics & Statistics, West Bengal & Annual Agricultural Plan, Cooch Behar 1986-87.

Note: ac=acre, MT=Metric Ton, kg=Kilogram.

Between blocks Dinhata I seems to obtain higher yields in most cases except for aus paddy, mustard and potatoes. It had earlier been noted that Dinhata I was agriculturally less-endowed, which may now appear to be paradoxical. The reason is however apparent from study of boro paddy, where Dinhata I excels: Dinhata I, in its comparatively adverse agricultural situation places higher reliance on technology and obviously has greater access to irrigation. Also it is quite likely that with wel-entrenched commercial cropping of tobacco, more enterprise is displayed by the Dinhata farmers. Aus paddy is gradually being supplanted by boro varieties; the fact that Tufanganj still persists in high acreages of the former is both a pointer to the higher moisture-retentivity in Tufanganj's soil and also to less dynamic agricultural practices. In combination with this, reference may be made to the Table 3.8, 3.9 & 3.10. Figures therein pertain to net acreage sown and area in which more than one crop is grown, over Dinhata I, Tufanganj I and , for the sake of comparability with the cropping table, over Tufanganj I & II (combined). Ratios of double-cropped area to net cultivated area show that double cropping is lower in the case of Dinhata I and higher for Tufanganj I; for Tufanganj I & II (combined) it increases handsomely, on inclusion of the agriculturally best-endowed block of Tufanganj II. On decomposition, the ratio for Tufanganj II would be as high as 90.15%. Keeping this in mind it is possible to assume that area, production and yield figures for Tufanganj in Table 3.13 would be lowered substantially by exclusion of Tufanganj II; so that the same technological divide between Dinhata II and Tufanganj I, as earlier alluded to, would appear more strongly.

3.11 Irrigation

After consideration of agriculture over the study-blocks attention now needs to be focused on their irrigation profiles. There has been substantial modification on irrigation technology from the traditional don system used to draw water from bils and other manual means of well-irrigation. Access to new technology however is recent,

following from the AFPP programme, and now accelerated by the Special Food Production Programme(SFPP) and the Integrated Rural Development Scheme(IRDP) schemes, along with schemes in the State-sector under the auspices of the State Department of Minor Irrigation. Technologies provided difference: the schemes in the State-sector consist, in the case of the study-blocks, of surface lift technology under the multi-user RLI(river lift irrigation)schemes and deep-boring technology using turbine/submersible pumps under DTW(deep tube well)schemes, while IRDP and SFPP schemes provide credit-linked support for installation of single-user medium-duty irrigation tube wells by private cultivators. In the later case,assistance is channelised to the District Rural Development Agency(DRDA) from funds made available through NABARD and World Bank auspices.

The bigger schemes are heavily capitalised with much greater water draft, technical details of which have been mentioned earlier. Assistance for STW is disbursed at subsidies of 25%, 33.75% and 50% of scheme-cost, respectively, for small farmers, marginal farmers and weaker sections (comprising scheduled castes/scheduled tribes/handicapped persons), the rest of expenditure being funded through bank loans under district credit plans prepared by the Lead Bank. Similar subsidies obtain for SFPP assistance except that 50% subsidy only applies to tribal farmers. In cases where the total scheme costs does not excess Rs. 3000/- for small farmers, Rs.4000/- for marginal farmers and Rs.5000/- for tribal farmers, the DRDA bears the entire cost with a provision that a willing farmer is permitted to meet any excess expenditure from his own resources.[61] The IRDP comprises a target-oriented package scheme addressed to rural population living below the poverty line, defined at a family income-level of Rs.6400/- or less,[62] funding for which is drawn from the Central and State Government on 50:50 sharing basis. As such the ceiling on subsidies for minor irrigation is in percentage rather than monetary terms.[63] Minor irrigation assistance under SFPP does not demarcate the specific target population on the basis of family income-ceilings,hence subsidies are bound within monetary limits. Applications from potential beneficiaries,in both cases, are processed by the DRDA.

Given their agricultural situations, the two study-blocks are expected to show differentiation in their approach to irrigation and irrigation technology. Salient features with respect to this are brought out in the Table 3.22.

The Table below shows distribution of STWs in Dinhata I and Tufanganj I by land-holding groups, with district figures for comparison. Separate columns provide the percentages of block-category to total district-category. Bracketed expressions, on the other hand, are distributive percentages of block-category to block-total. Once again it can be seen that there is divergence between Dinhata I and Tufanganj I. The distribution in Tufanganj I is of a more modal nature with closer correspondence to the district-pattern; Dinhata I is more extreme with greater clustering of STWS in the holding categories above one ha. At the upper end however Dinhata I is more convergent and Tufanganj more divergent than the district. Dinhata I with its poorer soil situation and more depressed occupational distribution indicates low response from the marginal categories of farmers; on the other hand larger farmers are much more inclined to adopt irrigation technology, even at the cost of funding it from their own resources - this re-defines their competitive bent. Much less evidence of such risk-bearing exists for Tufanganj I or for Cooch

Behar as a whole. Block-to-district category percentages echo the same findings: Tufanganj I contributes the larger part of marginal scheme-beneficiaries and Dinhata I, the larger part of the well-off beneficiaries. Figures at the bottom pertain to culturable command areas and to irrigation potential created. Once again Dinhata I with a smaller number of STWs has higher command areas and irrigation potential. Cooch Behar district figures provide a comparative standard.

Table 3.22

Shallow Tubewells (electricity & diesel) in Dinhata I & Tunfanganj I Blocks: Distribution by Landholding Groups

(no. of schemes)

Land Holding(ac)	Dinhata I	District	Tufangani I	District	Cooch Behar
0-1	402		912		4193
%	(22.05)	9.50	(43.91)	21.75	(35.84)
1-2	721		735		4283
%	(39.55)	16.83	(35.39)	17.16	(36.61)
2-4	552		335		2292
%	(30.28)	24.08	(16.13)	14.61	(19.59)
4-6	111		68		567
%	(6.09)	19.57	(3.27)	11.91	(4.85)
others	37		27		364
%	(2.03)	10.16	(1.30)	7.41	(3.11)
Total Scheme-holders	1823	15.58	2077	17.75	11699
Total CCA(acre)	6441.76		5697.89		3118.72
Total IP(acre)	7130.67		6460.19		34275.54

*CCA= Culturable Command Area, IP= Irrigation Potential

Source : Census of Minor Irrigation Schemes in West Bengal, 'Block Profile of Cooch Behar',SWID,1988.

Table 3.23

Shallow Tubewells in Dinhata I & Tufanganj I Blocks: Distribution by Power Source

STWs in Use	Dinhata I	Tufanganj I	Cooch Behar	West Bengal
Electric	37	49	245	33237
%	(2.07)	(2.43)	(2.16)	(9.06)
Diesel	1648	1964	8218	323621
%	(92.22)	(97.56)	(72.52)	(88.29)
Manual etc.	102	---	2868	9684
%	(5.70)		(25.31)	(2.64)
Total	1787	2013	11331	366542

Source : Compiled from :

i) Census of Minor Irrigation Schemes in West Bengal, 'Block Profile of Cooch Behar',SWID,1988.

ii) Census of Minor Irrigation Schemes in West Bengal, 'District Level Abstract',SWID,1988.

iii) Economic Review, Government of West Bengal, 1990-91.

iv) Block Plan of Dinhata I(1988-89) and Tufanganj I (1990-91).

The second Table 3.23 considers STW schemes in the study blocks on the basis of source of power. In this case percentage comparisons are also provided for the State of West Bengal besides Cooch Behar district. Comparing the State to the district, Cooch Behar reveals a crisis in energisation of STWs with a large 25.31% still being non-energised. Electrification in the district is also low at 2.16% compare to the State's 9.06%, though the State itself betokens very low electrifica- tion because of the low rural priorities of its transmission networks. Comparing blocks, energisation as a whole is better in Tufanganj I, so also for electrification. Dinhata I still has a diesel percentage that is much higher than the district and a much lower percentage of manually-powered STWs. For more allround assessment, one could consider the percentage distribution between three energy-sources for an agriculturally progressive district like Burdwan where the percentage ratio is 8.44:90.27:1.27.[44] Dinhata's pattern is close enough despite its lower access to electrically-powered STWs, even lower than for Cooch Behar district where it is located. Some understanding of these electricity aspects is also carried by the subsequent table.

Table 3.24

Community Irrigation Installations in Dinhata I & Tufanganj I Blocks
(h/a = hours per day)

Scheme	Energy-use 6.7h/d Dinhata I	Energy-use 7h/d Tufanganj I	Energy-use 6.63h/d Cooch Behar
DTW (no.)	7	2	51
CCA(area)	1260.09	311.22	5009.13
IP (area)	1383.69	311.22	6213.83
RLI (no.)	9	8	91
CCA(area)	2362.5	600	6153.22
IP (area)	2467.31	600	7456.17

Source : Census of Minor Irrigation Schemes in West Bengal, 'Block Profile of Cooch Behar',SWID,1988.

Note: CCA(culturable command area) & IP(irrigation potential) in the SWID Census, which are aggregates over Government and private SLI(surface lift irrigation) categories, have been adjusted by RLI-specific ratios obtainable in the block profile.

The table above presents information on RLI and DTW installations in the study-blocks. These installations are of larger capacities with well-yields upwards of 100m³/h and thus attached to multi-user configurations. Because of their nature, the schemes are Government-operated rather than private, even though some instances of RLI operated by public organisations are found elsewhere in the district. The DTWs are electrically operated while RLIs in the study blocks are diesel-powered, even though their ultimate conversion to electricity is technically feasible. DTW installations in Tufanganj I were relatively recent at the time of SWID Report(1988) hence data on culturable command area and irrigation potential appear somewhat arbitrary and independent of field conditions. Similar figures for Cooch Behar district provide a comparison, both for DTW and RLI installations. One thing that stands out in the table is the apparent lead that Dinhata I appears to have in irrigation compare to both Tufanganj I and to the district. This reinforces the observation earlier made about the more competitive attitudes of Dinhata I farmers. In the case of Tufanganj I, greater complacency appears to persist, which can be further elucidated by a reference to seasonal

cropping figures, later. In any case Tufanganj I does not make optimum use of irrigation capacities, neither in comparison to Dinhata I or to Cooch Behar district as a whole.

As many as four out of the eight Dinhata DTWs have underground distribution networks that are much more water-conserving than overground channels; these amount to 50% of such water-efficient distribution systems that exist in the district as a whole. Figures for average hours of availability for electricity per day during the peak season for the State-run DTWs are 6.7h/d for Dinhata I, 7h/d for Tufanganj I and an average of 6.63h/d of Cooch Behar district. Corresponding figures for electrically operated STWs are 4.7h/d, 8.4h/d and 6.4h/d,[45] respectively. Electricity, is more of a constraint for Dinhata I, but does not affect its higher intensity of irrigation.

Figures on kharif/rabi and other seasonal acreages are now considered in Table 3.25. The SWID's census does not provide seasonal acreages specific to RLI hence the figures on surface lift irrigation (including river/drain/tank based irrigation schemes) have been included. The percentages in brackets refer to the distribution of district acreages over blocks and schemes.

Table 3.25

Area Irrigated by Season & Scheme in Dinhata I and Tufanganj I Blocks, 1987-88

Dinhata I

Scheme	Kharif	Rabi	Perennial	Others	Total
STW(D+E)	1716.6	3718.9	146.3	570.8	6152.5
%	(17.7)	(15.2)	(30.8)	(13.1)	(15.8)
DTW	42.9	392.6	nil	35.2	470.7
%	(0.4)	(1.6)	(0)	(0.8)	(1.2)
SLI(RLI & Others)	240.3	897.6	0.9	179.2	1318.0
%	(2.5)	(3.6)	(0.1)	(4.1)	(3.3)

Tufanganj I

STW(D+E)	2217.3	3336.1	17.8	751.6	6322.9
%	(22.9)	(13.6)	(3.7)	(17.3)	(16.2)
DTW	nil	nil	nil	nil	nil
%	(0)	(0)	(0)	(0)	(0)
SLI(RLI & Others)	132.2	164.5	8.8	108.8	413.0
%	(1.3)	(0.6)	(1.8)	(2.5)	(1.0)

Cooch Behar

STW(D+E)	7702.2	17550.7	331.2	3077.6	28661.5
DTW	731.8	1385.9	nil	179.6	2297.3
SLI(RLI & Others)	1245.2	5469.3	143.8	1081.1	7939.5
Total	9679.2	24405.9	475	4338.3	38898.3

Source : Census of Minor Irrigation Schemes in West Bengal, 'Block Profile of Cooch Behar',SWID,1988.

From the table it is apparent that community irrigation is more effective in Dinhata I than in Tufanganj I. STW(D+E) is much more intensively used in the rabi season in Dinhata I; perennial irrigated acreages are also high. Tufanganj I, on the other hand, has higher acreage-intensity in 'other' irrigated seasons; since Table no 3.21 had suggested that traditional pre-kharif cultivation, especially of aus paddy is more predominant in Tufanganj I, the reason for such acreages are clear, boro cultivation being relatively lower there.

3.12 Directions for Empirical Study:

Given the native features of Cooch Behar district, the study region, and Dinhata I and Tufanganj I, the study-blocks, an assessment of irrigation impact on seasonal agriculture now needs to be made, particularly with reference to its energy-aspects. For this purpose field investigation was undertaken in selected villages: namely, Chilakhana, Ghogar Kuthi, Dwiper Par & Chamta in Tufanganj I and Bara Athiabari, Chhoto Phalimari, Bhatlaguri & Munshirhat in Dinhata I over a heterogeneous sample of cultivators, both from scheme-beneficiary and non-beneficiary categories. The purpose behind the field study was to elicit information about differential performance between schemes on the basis of their energy classifications, with special attention being given to the performance of the electrified sector.

The underlying reasoning is that any natural advantages conveyed by the use of a cheap and clean energy source like electricity will be converted into productive benefits for scheme-beneficiaries falling within the electrified sector. Low preponderance of electrified schemes in the State in general and in the study region in particular is the result of low generation and weak rural transmission networks, coupled with low priorities accorded to rural use of electricity for productive purposes of a non-industrial nature. That such a situation should persist indefinitely would augur ill for the prospects of rural development in regions where industrial alternatives are at a minimum. Hence the assessment undertaken is hoped to be timely and is expected *a priori* to argue the case for revision of electricity priorities so as to ensure equity in benefits imparted to both rural and urban segments of the population.

References

1. Notification No.3589.G.A. dated 1 January 1950, Majumder Durga Das,West Bengal Districts Gazetteers, Koch Bihar,1977.pp.6.
2. Majumder,D.D, 'West Bengal Districts Gazetteers', Koch Bihar,1977, pp.1.
3. Ibid. pp.27.
4. Ibid. pp.1.
5. Ibid. pp.27.
6. Ibid. pp.2.
7. Ibid. pp.2.
8. Technical Report : Series D No.33, Hydrology & Ground Water Potential of Koch Bihar District, Central Ground Water Board, Eastern Region,1983, pp.4.
9. Ibid. pp.18.
10. Ibid. pp.7.
11. Ibid.
12. Annual Plan on Agriculture, Cooch Behar, 1986-87,Principal Agricultural Office, Cooch Behar, pp.3.
13. Majumder,D.D, op.cit. pp.131.
14. Ibid pp.138-141.

15. District Census Handbook, Series 23, West Bengal, Part XIII-B, Koch Bihar District, pp.9.
16. Bose Ashish,Demographic Diversity of India, 1991 Census, State and District Level Data - A Reference Book, B.R.Publishing Corporation,Delhi,1991, pp.379.
17. Ibid. pp.381.
18. Op.cit. District Census Handbook, pp.9.
19. Op.cit. Majumder,D.D, pp.58.
20. Op.cit. District Census Handbook, pp.XIV.
21. Op.cit. Majumder,D.D, pp.153.
22. Op.cit. Technical Report, pp.4-5.
23. Op.cit. Annual Plan on Agriculture, pp.3.
24. Op.cit. Technical Report, pp.5.
25. Ibid.
26. Ibid. pp.7.
27. Economic Review 1990-91, Government of West Bengal,pp.86.
28. Ibid.
29. Ibid. pp.211.
30. Op.cit. Majumder,D.D, pp.14.
31. Hunter W.W, A Statistical Account of Bengal,vol.X,Concept Publishing Company,New Delhi,1984,pp.394.
32. Mitra A, Census 1951, West Bengal, District Handbooks Cooch Behar,Appendix II,An Account of Land Management in Cooch Behar, 1870-1904, pp.lxxi.
33. Op.cit. Majumder,D.D, pp.14.
34. Ibid. pp.65.
35. Ibid. pp.66.
36. District Plan 1989-90, Cooch Behar District, Office of the District Magistrate, Section 6,pp.IV.
37. Op.cit. Majumder D.D, pp.66.
38. Op.cit. Annual Plan on Agriculture, pp.20.
39. Conference on Regional Development of North Bengal Prospects & Potentials Background Paper,Goverment of West Bengal, 1986,pp.32.
40. Op.cit. Technical Report, pp.7.
41. Ibid. pp.11.
42. Ibid.
43. Ibid. pp.10.
44. Ibid. pp.14.
45. Over-Exploitation Committee Report, Agricultural Refinance Development Corporation, 1981.
46. Op.cit. Technical Report, pp.13.
47. Ibid.
48. Ibid.pp.14.
49. Ibid.pp.16.
50. Ibid.pp.17.
51. Ibid.pp.13.
52. Ibid.pp.11.
53. Op.cit. District Census Handbook, pp.8-9.
54. Op.cit. Majumder D.D, pp.67.
55. Op.cit. Mitra A, pp.xx.
56. Op.cit. Annual Plan on Agriculture, Table 1.4.1, pp.13.
57. Op.cit. Majumder D.D, pp.67.
58. Op.cit. Mitra A, pp.xx.
59. Op.cit. Annual Plan on Agriculture, Table no. 1.5.1.pp.18.
60. Ibid. Table 1.4.2.pp.14.
61. Annual Action Plan 1992-93, DRDA,pp.122-124.
62. IRDP Guidelines, Section I,pp.1.
63. Ibid.
64. Op.cit. Economic Review 1990-91, Table 5.21 pp.90.
65. State Level Abstract,Census of Minor Irrigation Schemes in West Bengal,1988,State Water Investigation Directorate (SWID), Government of West Bengal.

CHAPTER IV

THE SAMPLE STUDY : BROAD RESULTS

4.1 Introduction

Studies of irrigation in India have derived a lot of impetus from the growing emphasis on irrigation works made in programmes for agricultural development, especially since the Third Plan. The period since the Third Plan has also been marked by shifting focus to minor irrigation works, leading to near doubling of their share in total irrigation outlays. This shift in emphasis has led to a recognition of the importance of ground-water resources as a means of providing a conjunctive water source to normally rain-fed agriculture. Because of the high involvement of public investment, optimum use of the irrigation capacities created becomes a subject of economic interest. The smallest of the minor irrigation schemes, in general, are low cost-intensive and are financed by fast-disbursing loan assistance, with an element of subsidy thrown in as an incentive. Other irrigation works, however, owe their existence to direct government finance.

Hitherto, studies on irrigation impact have concentrated on the productivity dimensions of the resultant agricultural growth. Productivity studies, however, have a wide compass that tends to obliterate micro-level distinctions between the various scheme-types, as far as minor irrigation works are concerned, some comment is found with respect to irrigation impact by source. It has been noticed that with irrigation, more intensive use is made of land and that irrigated areas grow more of high-productivity, high-value crops which either cannot be raised at all, or do not do as well under rain-fed conditions. Micro-studies, nevertheless, have presented conceptual problems in assessing the impact of irrigation because of strong complementarities between water-use and the use of other agricultural inputs. The reason is that irrigation affects crop yields directly, as also through its influence on the scope for using other inputs and on their efficiency.

Cost-efficiency of irrigation schemes offers an interesting area for micro-level studies of the impact of irrigation on cultivator-behaviour, inasmuch as changes in such behaviour can be attributed as responses to changed investment perceptions on the part of the cultivator. The reasoning underlying any such study is obvious - with irrigation, comes both awareness of and capacity to apply new agricultural technology, and since such application involves an investment decision by the cultivator, it has economic implications. To lay a foundation for such a study, it is necessary to preserve scheme-differences in the data so as to be able to assess differential impact, if any.

For the purposes of classification, minor irrigation schemes can be clubbed under two broad energy-heads i.e. electrified schemes and diesel-powered schemes. Within each head, further classification can be made in terms of irrigation capacities, which follows the technical distinctions between pumping capacities. The higher capacity pumps serve deep tubewell [DTW] and river-lift irrigation [RLI] schemes, of which the former are electrified while the latter draw their energy from diesel. The two schemes are operated by government departments, with scheme- beneficiaries being entitled to water-sharing rights at scheduled rates. The smaller schemes are privately owned and financed through loan assistance. They consist of shallow tubewells energized

by electricity [STW(e)] where electrical connections are available, or else by diesel [STW(d)]. The actual schemewise mix is dictated by availability of finance for the smaller schemes, and availability of pumping capacities for the larger schemes. Availability constraints also dictate the source of energy, with the number of pumpsets energized through electricity being commensurate with the rate of rural electrification.

It might be thought that homogenous cultivator-responses are created by irrigation, irrespective of scheme-type, so that the irrigated sector constitutes a uniform group. However studies found in the literatures have demonstrated better performances in the case of privately-owned tubewells. Other evidence exists to show that cultivator-responses are also marked by a preference shift to a more water-intensive cropping pattern. In view of this, it is instructive to study differential responses, and to see if irrigation costs in general, and energy factors in particular have any role in determining such shifting preferences.

Both these aspects are addressed within the simple framework of a regional sample-study, which lays special emphasis on the impact of irrigation on input-use. It is hoped that thereby, new light will be shed on the complexities posed by the complementarites between water-use and the use of other agricultural inputs alluded to above, which have hitherto reduced the effectiveness of micro-level studies. It needs, however, to be mentioned that in the region studied, the use of irrigation is supplemental because of an extensive monsoon, and that the findings pertain, *per se*, to conjunctive use of minor irrigation capacities with normally rain-fed agriculture.

METHODOLOGY

4.2 The Field Survey

Data was drawn from a total of 74 respondents spread over 8 villages in Tufanganj I and Dinhata I blocks in Cooch Behar district. Block selection was made purposively, on the basis of the following criteria :

i) state of agricultural development; and
ii) nature of irrigation schemes at block level, in order to include both good-performance as well as average-performance blocks, as also to cover the gamut of irrigation schemes available by source.

Actual respondents within the stratification of 8 villages were drawn on random basis. Roughly 30% of the sample was drawn from such cultivators, hereinafter referred to as non-beneficiaries, who had not availed of any irrigation scheme, in order to provide a control-group against whom data from the beneficiaries of irrigation schemes could be compared and evaluated. The questionnaire covered four cropping seasons, viz. boro (January to April), pre-kharif (February to May), kharif (June to September) and rabi (October to December), which are predominant in the district following introduction of multiple cropping via irrigation. Each respondent was asked to supply information on cropping, use of inputs and expenditure thereon, land-holdings and land-acquisition, etc., with reference to two distinct points of time, namely,

i) prior to the introduction of any irrigation scheme in the village, and
ii) at the time of the interview.

This was done in order to provide a "before and after" picture of the overall position of cultivators in the sample, which was to form the basis of the impact-study. The time-gaps between the above periods generally vary between 3 to 5 years, indicating that introduction of irrigation (except for traditional systems) is a relatively recent phenomenon in the district.

4.3 Computation

Initial compression of the data was achieved by subtracting pre-irrigation data from post-irrigation data per cropping season. This yielded incremental differences, or impact variables under each of the information-heads. Thereafter, seasonal differences by cropping season were further compressed into annual figures which provided a distribution of impact variables on 20 heads of information. An analysis of schemewise averages under these heads was undertaken for initial identification of impact patterns, salient parts of which are reproduced later in this chapter.

It was found necessary to concentrate on the cost dimension of the use of various agricultural inputs instead of physical quantities thereof, because of wide disparities in magnitudes and units of measurement, for example, pesticide-use measured in grams and manure-use measured in (thousands) kilograms, or between the above and labour-use measured in man-days. Thus only cost magnitudes of input-use were retained for further analysis. It was also found necessary to standardize the cost data because of disparate ranges in their distribution. This is because agricultural inputs of different kinds do not have equi-proportionate weighting in the total investment basket of a cultivator. Standardization of the data yielded a standardized data-matrix to which multivariate methods were applied for further analysis in order to identify, particularly, aspects of joint-variability.

The Method of Principal Components* is a useful method for identifying joint-variability patterns in multivariate data as it affords compacting of total variance within the data into the principal components of variance, each of which is defined as a linear combination of the distributions of individual component variables. The method is particularly useful in handling explanatory data where the presence of a high degree of multicollinearity is suspected, as the PC-transformations yield new explanatory data series that are statistically independent of each other.

The cost variables considered were seed costs (*SEEDCOST*), manure costs (*MANURCOST*), fertilizer costs (*FERTCOST*), pesticide costs (*PESTCOST*), other miscellaneous costs such as land-preparation costs (*OTHCOST*), labour costs (*LABCOST*) and energy costs of irrigation (*ENERGYCOST*). From the standardized data-matrix, the correlation matrix was computed as below :

* e.g. Johnston J. Econometric Methods.

Table 4.1

Correlation Matrix

	1 SeedCost	2 ManurCost	3 FertCost	4 PestCost	5 OthCost	6 EnergyCost	7 LabCost
1 SeedCost	1.000	0.339	0.346	0.273	0.263	0.047	0.343
2 ManurCost	0.339	1.000	0.562	0.386	0.629	0.109	0.599
3 FertCost	0.346	0.562	1.000	0.691	0.623	0.267	0.739
4 PestCost	0.273	0.386	0.691	1.000	0.486	0.199	0.503
5 OthCost	0.263	0.629	0.623	0.486	1.000	0.134	0.782
6 EnergyCost	0.047	0.109	0.267	0.199	0.134	1.000	0.116
7 LabCost	0.343	0.599	0.739	0.503	0.782	0.116	1.000

Source : Sample Survey

As the correlation matrices and dispersion matrices are identical for standardized data with mean = 0 and unit variance, solution of the correlation matrix yielded the following eigenvectors and eigenvalues tabulated below in the Table of Principal Components:

Table 4.2

Matrix of Principal Components
Table of Eigenvectors

	1 SeedCost	2 ManurCost	3 FertCost	4 PestCost	5 OthCost	6 EnergyCost	7 LabCost
PC1	0.25	-0.27	0.91	-0.05	0.13	0.10	0.04
PC2	0.40	-0.18	-0.07	-0.46	-0.76	-0.06	-0.11
PC3	0.46	0.13	-0.04	0.25	0.03	-0.64	0.54
PC4	0.38	0.18	0.00	0.73	-0.29	0.38	-0.24
PC5	0.44	-0.11	-0.30	-0.24	0.32	0.60	0.44
PC6	0.14	0.90	0.20	-0.34	0.05	0.07	-0.08
PC7	0.46	-0.13	-0.18	-0.11	0.47	-0.26	-0.66

Source : Sample Survey

Table 4.3

PC Variances

	Eigenvalues	%Var	CumVar
PC1	3.657	52.25	52.25
PC2	1.008	14.40	66.64
PC3	0.815	11.64	78.29
PC4	0.656	9.37	87.65
PC5	0.418	5.98	93.63
PC6	0.288	4.12	97.75
PC7	0.158	2.25	100.00
Total Variance	7	100	

CumVar = cumulative variance

Source : Sample Survey

Row-variables in the table above indicate combinatorial weights for each cost variable by principal component. It is seen that good compacting of sample variance has been achieved by reference to the percentage-transformation of variances via the eigenvalue.For example, PC1 accounts for 52.25% of total sample variance, PC2 for 14.40%, PC3 for 11.64%, PC4 for 9.37% and the first four PCs cumulatively account for as much as 87.65% of total variance.

In order to analyze the proportional importance of each cost variable in each PC, vis-a-vis scheme characteristics as reflected in the cost-variables, PC-scores were computed for each PC on standardized values by substituting within the following family of linear equations, each of which is a linear combination of the original standardized data-values:

PC1-SCOR=.25*SEEDCOST*-.27*MANURCOST*+.91*FERTCOST*-.05*PESTCOST*+.13*OTHCOST*+.10*ENERGYCOST*+.04*LABCOST*

PC2-SCOR = .40*SEEDCOST*-.18*MANURCOST*-.07*FERTCOST*-.46*PESTCOST* -.76*OTHCOST*-.06*ENERGYCOST*-.11*LABCOST*

PC3-SCOR = .46*SEEDCOST*+.13*MANURCOST*-.04*FERTCOST*+.25*PESTCOST* +.03*OTHCOST*-.64*ENERGYCOST*+.54*LABCOST*

PC4-SCOR = .38*SEEDCOST*+.18*MANURCOST*+.00*FERTCOST*+.73*PESTCOST* -.29*OTHCOST*+.38*ENERGYCOST*-.24*LABCOST*

PC5-SCOR = .44*SEEDCOST*-.11*MANURCOST*-.30*FERTCOST*-.24*PESTCOST* +.32*OTHCOST*+.60*ENERGYCOST*+.44*LABCOST*

PC6-SCOR = .14*SEEDCOST*+.90*MANURCOST*+.20*FERTCOST*-.34*PESTCOST* +.05*OTHCOST*+.07*ENERGYCOST*-.08*LABCOST*

PC7-SCOR = .46*SEEDCOST*-.13*MANURCOST*-.18*FERTCOST*-.11*PESTCOST* +.47*OTHCOST*-.26*ENERGYCOST*-.66*LABCOST*

Each PC-SCOR can be interpreted as a new cost-variable (*COMBCOST*) or combined cost which is a weighted sum (not a simple aggregation) of individual cost variables, the weights themselves representing the responsiveness of each Principal Component to variations in the cost variables themselves.

The PC-SCORs for each PC defined over 74 respondents were analyzed over irrigation schemes and yielded distinct schemewise rankings for each PC, in terms of average PC-SCOR per scheme. These results are reproduced in Table 4.4 & Table 4.5, later. The rankings themselves indicate schemewise-bias present in each PC, this being attributable to the different weightings assigned by each PC to the impact variables. It may be noted that, for example, the apparent inversion of rankings between PC1 and PC2, as far as the category NB is concerned is due to the fact that PC2 gives primary importance to those sources of variation excluded under PC1.

4.4 Findings

It must be noted that the base-data was in incremental form and not in actual magnitudes of cost variables per respondent. Hence correlation between any two data-series is a measure of joint-variability of incremental rather than actual costs. As each set of PC-weights consists of both positive and negative values, it is obvious that two cost-variables for which PC-weights possess the same sign are directly related for that PC, whereas they are inversely

related when PC-weights differ in sign. Economic meaning can be assigned to the above, insofar as each cost-variable reflects usage of particular physical inputs. Thus direct relationships between cost-variables indicate, for each PC, complementarity of the inputs concerned, while inverse relationships indicate substitutability of inputs.

PC1 assigns highest weighting to *FERTCOST*, with complementarity, in decreasing order, between it and *SEEDCOST*, *OTHCOST*, *ENERGYCOST* and *LABCOST*; a substitute relationship with the above input-factors is, however, indicated for *MANURCOST* and *PESTCOST*. PC1 is highly sensitive to *FERTCOST* and *SEEDCOST* and to *MANURCOST* (inversely). Schemewise rankings place STW(e) highest of all in terms of PC-SCORs followed by STW(d), then RLI(d) and DTW(e) together, and last of all NB.

PC2 weights relate *SEEDCOST* (inversely) to other cost-variables. PC2 is highly sensitive to *OTHCOST* and *PESTCOST* (inversely) and *SEEDCOST* (directly). The ranking places NB highest, followed by STW(e),RLI(d),DTW(e) and STW(d) last of all.

In the case of PC3, *FERTCOST* and *ENERGYCOST* are inversely related to the rest of cost-variables. PC3 sensitivity is as follows : *ENERGYCOST* (inversely) and *LABCOST*, *SEEDCOST* and *PESTCOST* (directly). PC3 rankings place DTW(e) highest of all followed by RLI(d), STW(e), STW(d), and NB last of all.

PC4 relates *LABCOST* and *OTHCOST* inversely to other cost variables. PC4 sensitivities are as follows: *PESTCOST*, *SEEDCOST*,*ENERGYCOST* and *MANURCOST* (directly) and *OTHCOST* & *LABCOST* (inversely). PC4 rankings place STW(d) highest followed by RLI(d), STW(e), DTW(e) and NB last of all.

PC-SCOR patterns over the different schemes are reproduced below in two tables. The first tabulates schemewise average PC-SCORS over PC1 to PC7 along with variances within the scheme. Scheme rankings per PC, on the basis of PC-SCOR averages are reproduced as an adjunct to this table. Rankings from PC1 to PC7 are evident therein. However, since PC1 to PC4 explain 87.65% of the total variance, it is not necessary to go into detailed exposition of the later PCs here.

Table 4.4

Principal Component Scores : Schemewise Averages over
All Impact Variables (PC-weights from Table 4.3)

		PC - SCORS						
		PC1	PC2	PC3	PC4	PC5	PC6	PC7
NB	avg	-1.23	1.46	-0.96	-0.97	-0.88	-0.95	0.45
	var	0.10	0.18	0.09	0.06	0.10	0.16	0.03
RLI(d)	avg	0.40	-0.58	0.83	0.39	-0.03	0.65	-0.01
	var	0.53	0.60	0.70	0.40	0.46	0.62	0.45
STW(d)	avg	0.50	-0.80	-0.09	0.60	0.71	0.13	-0.32
	var	0.58	1.29	1.32	1.16	0.86	0.60	0.59
STW(e)	avg	0.82	-0.17	0.24	0.38	0.35	0.40	-0.31
	var	0.59	0.86	0.77	0.62	0.27	0.60	0.15
DTW(e)	avg	0.40	-0.79	1.00	0.02	0.24	0.63	-0.05
	var	0.41	0.56	0.85	0.29	0.36	0.55	0.18
ALL(e)	avg	0.63	-0.45	0.62	0.22	0.30	0.51	-0.19
	var	0.56	0.82	0.98	0.51	0.31	0.59	0.18

avg = ArithMean, var = SchemeVariance

Source : Sample Survey

Table 4.5

Ranking Table over all Principal Components
Schemewise Rankings over PC-SCORs

PC1	PC2	PC3	PC4	PC5	PC6	PC7
STW(e)	NB	DTW(e)	STW(d)	STW(d)	RLI(d)	NB
ALL(e)	*STW(e)	RLI(d)	RLI(d)	STW(e)	DTW(e)	*RLI(d)
STW(d)	*ALL(e)	ALL(e)	STW(e)	ALL(e)	ALL(e)	*DTW(e)
RLI(d)	*RLI(d)	STW(e)	ALL(e)	DTW(e)	STW(e)	*ALL(e)
DTW(e)	*DTW(e)	*STW(d)	DTW(e)	*RLI(d)	STW(d)	*STW(e)
*NB	*STW(d)	*NB	*NB	*NB	*NB	*STW(d)

** = negative placings*

Source : Sample Survey

The next table, i.e. Table 4.6, pertains to PC-SCOR averages, for the first four PCs,over each impact variable. The table itself results from assigning respective PC coefficients from Table 4.2 to each impact variable over standardized values and computing schemewise averages thereof for PC1 to PC4. Analysis of the average score per impact variable gives sufficient idea of their relative weights in each PC as also their explanatory role in defining the schemewise ranking in the earlier table.

Table 4.6

Ranking Table over all Impact Variables
Schemewise Rankings over PC-SCORs
Average PC-SCOR per Impact Variable

	PC1		PC2		PC3		PC4	
1	RLI(d)	0.12	RLI(d)	0.19	RLI(d)	0.22	RLI(d)	0.18
SeedCost	STW(e)	0.12	STW(e)	0.19	STW(e)	0.22	STW(e)	0.18
	ALL(e)	0.12	ALL(e)	0.19	ALL(e)	0.21	ALL(e)	0.18
	DTW(e)	0.12	DTW(e)	0.18	DTW(e)	0.21	DTW(e)	0.18
	STW(d)	0.05	STW(d)	0.07	STW(d)	0.09	STW(d)	0.07
	NB	-0.22	NB	-0.34	NB	-0.39	NB	-0.32
2	NB	0.28	NB	0.19	RLI(d)	0.10	RLI(d)	0.14
ManurCost	STW(d)	-0.05	STW(d)	-0.04	DTW(e)	0.09	DTW(e)	0.13
	STW(e)	-0.07	STW(e)	-0.05	ALL(e)	0.06	ALL(e)	0.09
	ALL(e)	-0.13	ALL(e)	-0.09	STW(e)	0.04	STW(e)	0.05
	DTW(e)	-0.19	DTW(e)	-0.13	STW(d)	0.02	STW(d)	0.03
	RLI(d)	-0.21	RLI(d)	-0.14	NB	-0.14	NB	-0.19
3	STW(e)	0.71	NB	0.08	NB	0.04	NB	0.00
FertCost	ALL(e)	0.58	STW(d)	-0.03	STW(d)	-0.01	STW(d)	0.00
	RLI(d)	0.47	DTW(e)	-0.03	DTW(e)	-0.02	DTW(e)	0.00
	DTW(e)	0.41	RLI(d)	-0.04	RLI(d)	-0.02	RLI(d)	0.00
	STW(d)	0.36	ALL(e)	-0.04	ALL(e)	-0.02	ALL(e)	0.00
	NB	-1.10	STW(e)	-0.05	STW(e)	-0.03	STW(e)	0.00
4	NB	0.05	NB	0.51	STW(d)	0.15	STW(d)	0.43
PestCost	STW(e)	-0.01	STW(e)	-0.09	RLI(d)	0.14	RLI(d)	0.39
	ALL(e)	-0.01	ALL(e)	-0.13	DTW(e)	0.09	DTW(e)	0.27
	DTW(e)	-0.02	DTW(e)	-0.17	ALL(e)	0.07	ALL(e)	0.20
	RLI(d)	-0.03	RLI(d)	-0.25	STW(e)	0.05	STW(e)	0.14
	STW(d)	-0.03	STW(d)	-0.27	NB	-0.28	NB	-0.80
5	DTW(e)	0.10	NB	0.85	DTW(e)	0.02	NB	0.32
OthCost	STW(d)	0.08	STW(e)	-0.09	STW(d)	0.02	STW(e)	-0.03
	RLI(d)	0.05	ALL(e)	-0.31	RLI(d)	0.01	ALL(e)	-0.12
	ALL(e)	0.05	RLI(d)	-0.31	ALL(e)	0.01	RLI(d)	-0.12
	STW(e)	0.02	STW(d)	-0.44	STW(e)	0.00	STW(d)	-0.17
	NB	-0.15	DTW(e)	-0.58	NB	-0.03	DTW(e)	-0.22
6	STW(d)	0.09	NB	0.04	NB	0.43	STW(d)	0.34
EnergyCost	STW(e)	0.04	DTW(e)	0.02	DTW(e)	0.26	STW(e)	0.15
	ALL(e)	0.00	RLI(d)	0.02	RLI(d)	0.18	ALL(e)	0.02
	RLI(d)	-0.03	ALL(e)	0.00	ALL(e)	-0.03	RLI(d)	-0.11
	DTW(e)	-0.04	STW(e)	-0.02	STW(e)	-0.26	DTW(e)	-0.15
	NB	-0.06	STW(d)	-0.05	STW(d)	-0.58	NB	-0.25
7	DTW(e)	0.03	NB	0.12	DTW(e)	0.41	NB	0.27
LabCost	ALL(e)	0.02	RLI(d)	-0.04	ALL(e)	0.31	RLI(d)	-0.09
	STW(d)	0.02	STW(e)	-0.05	STW(d)	0.23	STW(e)	-0.10
	STW(e)	0.02	STW(d)	-0.05	STW(e)	0.22	STW(d)	-0.10
	RLI(d)	0.01	ALL(e)	-0.06	RLI(d)	0.20	ALL(e)	-0.14
	NB	-0.04	DTW(e)	-0.08	NB	-0.59	DTW(e)	-0.19

Source: Sample Survey

Schemewise variances in Table 4.4 are useful in ascertaining dispersion within the schemewise sub-samples, as a yardstick of differential irrigation impact. Thus it is seen that NB displays low variances indicating greater uniformity within the NB sub-sample, the larger schemes i.e. DTW(e) and RLI(d) display variances within the medium range, while the smaller schemes i.e. STW(e) and STW(e) display higher variances. Thus, among the irrgated sub-sample as a whole, impact-responses for the larger schemes possess more homogenous group-characteristics, while group-responses for the STW schemes are more disparate. The point is better brought out by study of the clustering behaviour in the PC-plots attached below.

From Table 4.6, it can be seen that STW(e) holds its own position over PC1 to PC3 and is well ahead of the diesel sector. DTW(e) is comparatively poorer in its rankings in PC1 and PC2 but moves to first place in PC3, with the energized sector (through electricity) i.e. ALL(e), remaining consistently ahead of the diesel sector. It is only in PC4 that the diesel sector moves ahead.

Average scores over impact variables in PC1 indicate the pre-eminence of *FERTCOST* in determining scheme rankings, followed, to a lesser degree by *SEEDCOST* and *MANURCOST*. In the case of STW(e), which occupies first place among the schemes in PC1 the score for *FERTCOST* is much higher than for other scheme categories, implying higher intensity of fertilizer-use. The score for *SEEDCOST* is also high, although this is also replicated by RLI(d) and DTW(e). *MANURCOST* has an adverse weighting in PC1, which combined with low manure-use intensity accounts for positive score obtained for this impact variable by NB. Other schemes show negative values although STW(e) has a relatively higher value within this negative range, suggesting lower intensity in manure-use which is, however, made up by its higher intensity in fertilizer-use. NB, which stands at the other end of the ranking scale, exhibits opposite patterns.

Under PC2, NB moves to the top on the strength of high scores for *OTHCOST*,*PESTCOST* and *MANURCOST*. It must be noted that weighting of impact variables under PC2 is negative for all variables other than *SEEDCOST*, and also the positive magnitudes of NB scores indicate lower intensity of input-use by NB for the variables indicated. STW(e) occupies second spot mostly on the strength of lower scores under *OTHCOST*,*PESTCOST* and *MANURCOST*, and a satisfactory score under positively-weighted *SEEDCOST*. STW(d), which occupies bottom spot, is weighted down by its scores for *OTHCOST*,*PESTCOST* and *SEEDCOST*.

PC3 rankings, with DTW(e) at the head of the scale are attributable to higher scores overall, under *LABCOST*,*ENERGYCOST* and *SEEDCOST* followed by *PESTCOST* & *MANURCOST*. Of these, *ENERGYCOST* is weighted negatively under PC3, which obviously places the larger schemes i.e. DTW(e) and RLI(d) in an intrinsically better position because of their lower unit-cost of irrigation. The negative score for *ENERGYCOST* in STW(e) is obviously because of increased intensity of irrigation-use rather than unit-cost, since unit-costs of energy for STW(e) compare favourably with RLI(d). The high score of NB under *ENERGYCOST* is initially confusing till it is remembered that energy costs for this category are nil and that the non-zero score here is the result of the standardization procedure. STW(e) is however, still ahead of STW(d), particularly in *SEEDCOST*.

PC4 rankings are headed by STW(d) primarily on account of better scores obtained by it under *PESTCOST* and *ENERGYCOST*. Ranking for the other schemes follows for the same reason, except that *SEEDCOST* replaces *ENERGYCOST* as a determining factor. Once again,the part played by *ENERGYCOST* in placing STW(d) at the head is because of the much higher unit-cost of irrigation for this scheme. On the other hand, the difference in scores between RLI(d) and STW(e), which have comparable unit energy costs, would indicate greater intensity of irrigation use for the latter.

Individual PCs give rise to clear and precise analytical interpretations via Table 4.6. This ranking table shows, for the first four PCs, schemewise rankings of average PC-SCORS on the 7 impact variables. Negative/positive magnitudes have, however, to be interpreted with due consideration to inverse /direct weightings in Table 4.2. However, PC1, which accounts for the largest part of sample variance,is clearly weighted in favour of *ENERGYCOST*,*SEEDCOST* and *PESTCOST* (negatively). Ranking patterns over individual impact variables concur with schemewise ranking on the overall PC1-SCOR (allowance having being made for negatively weighted *MANURCOST* and *PESTCOST*, where the ranking is a mirror transformation). Schemewise rankings can be read from Table 4.5.

PC2, which explains the second-largest component in sample variance, is weighted on, sequentially, *OTHCOST*, *PESTCOST*,*MANURCOST* and *SEEDCOST*, and to a smaller degree on *LABCOST*. Of these only *SEEDCOST* has positive PC-weight, where NB has the lowest PC-SCOR. In other impact variables, all of which have negative PC-weights, NB records high PC-SCORS, which are a reflection of the inverse relationship whereby NB performances are lowest on all counts. On the other hand, all other schemes have positive PC-SCOR for *SEEDCOST* and negative PC-SCOR for all other, negatively-weighted, impact variables. Among these schemes,second-placed STW(e) records better scores in *FERTCOST* and *SEEDCOST*, as in PC1 where it places first.

PC3 weights are towards *ENERGYCOST* (negative),and *LABCOST*, *SEEDCOST*,*PESTCOST* and *MANURCOST*. DTW(e) which occupies first position scores significantly better in the first three of these categories. STW(e) fares poorly because of negative weighting to *FERTCOST* where its performance, in general, has been strong. STW(d), on the other hand, is dragged down to second-last place mostly on account of the higher negative weight to *ENERGYCOST* for which its unit-costs are significantly higher.

These findings are consistent with PC4 where STW(d) occupies top position on account, primarily *PESTCOST*, (positively weighted) *ENERGYCOST* and *OTHCOST*. Other schemes score better under *LABCOST*, *SEEDCOST* and *MANURCOST*.

4.5 A Summary

The methodology used for multivariate analysis clearly identifies the strengths and weaknesses of each scheme, insofar as input-use parameters are concerned. Of STW(e), it can be said that the scheme makes intensive use of fertilizers and seeds. It might be construed from this that its performance in terms of acreage sown might be better. With reference to the present area of analysis this implication seems to be underscored by the fact that as far as energy costs are concerned,STW(e) scores considerably better than RLI(d),

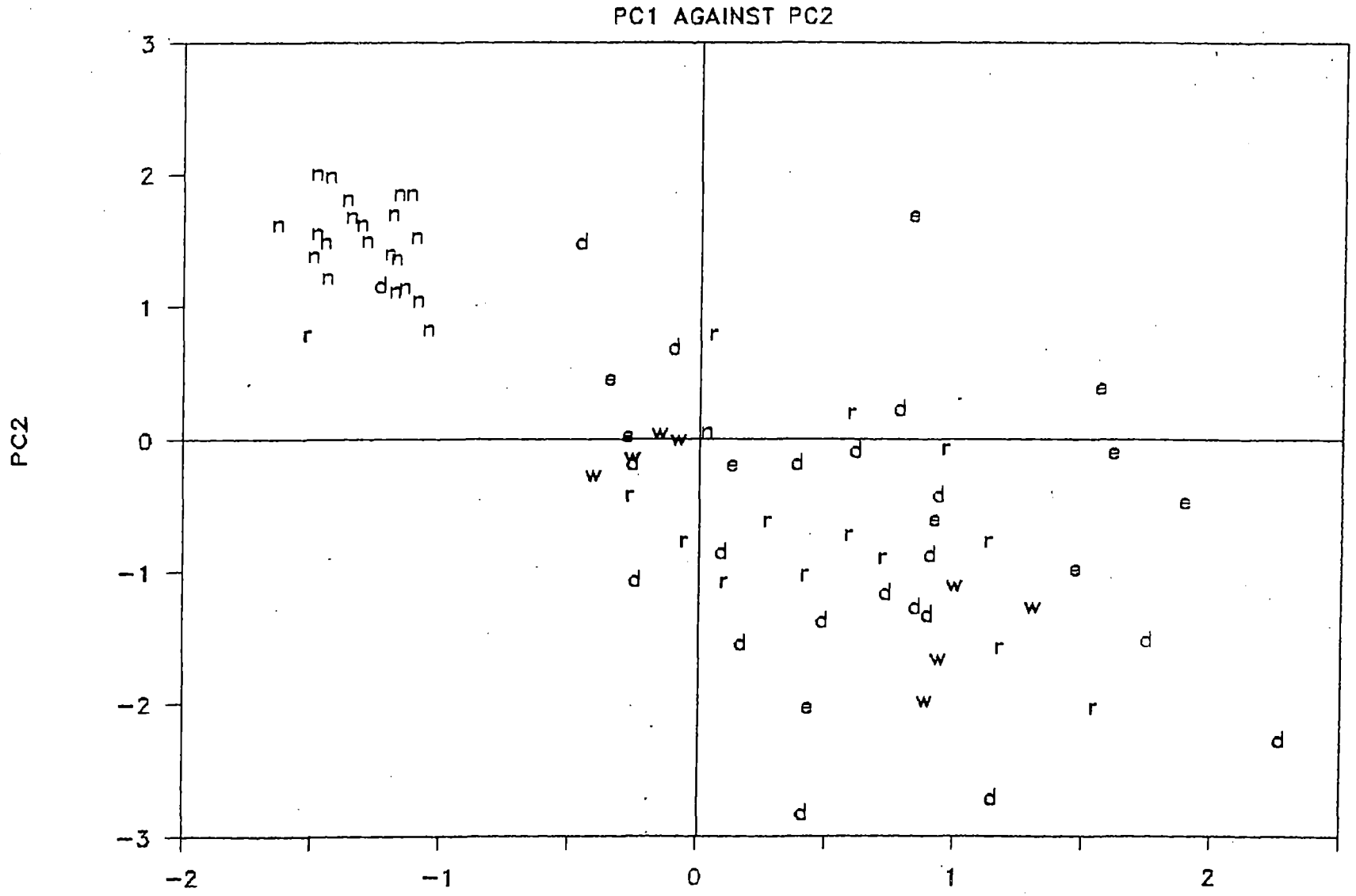

n – Non Beneficiary ; W – Deep Tube Well ; r – River Lift Irrigation ;
d – Shallow Tube Well (Disel) ; e – Shallow Tube Well (Electrified).

Fig-1

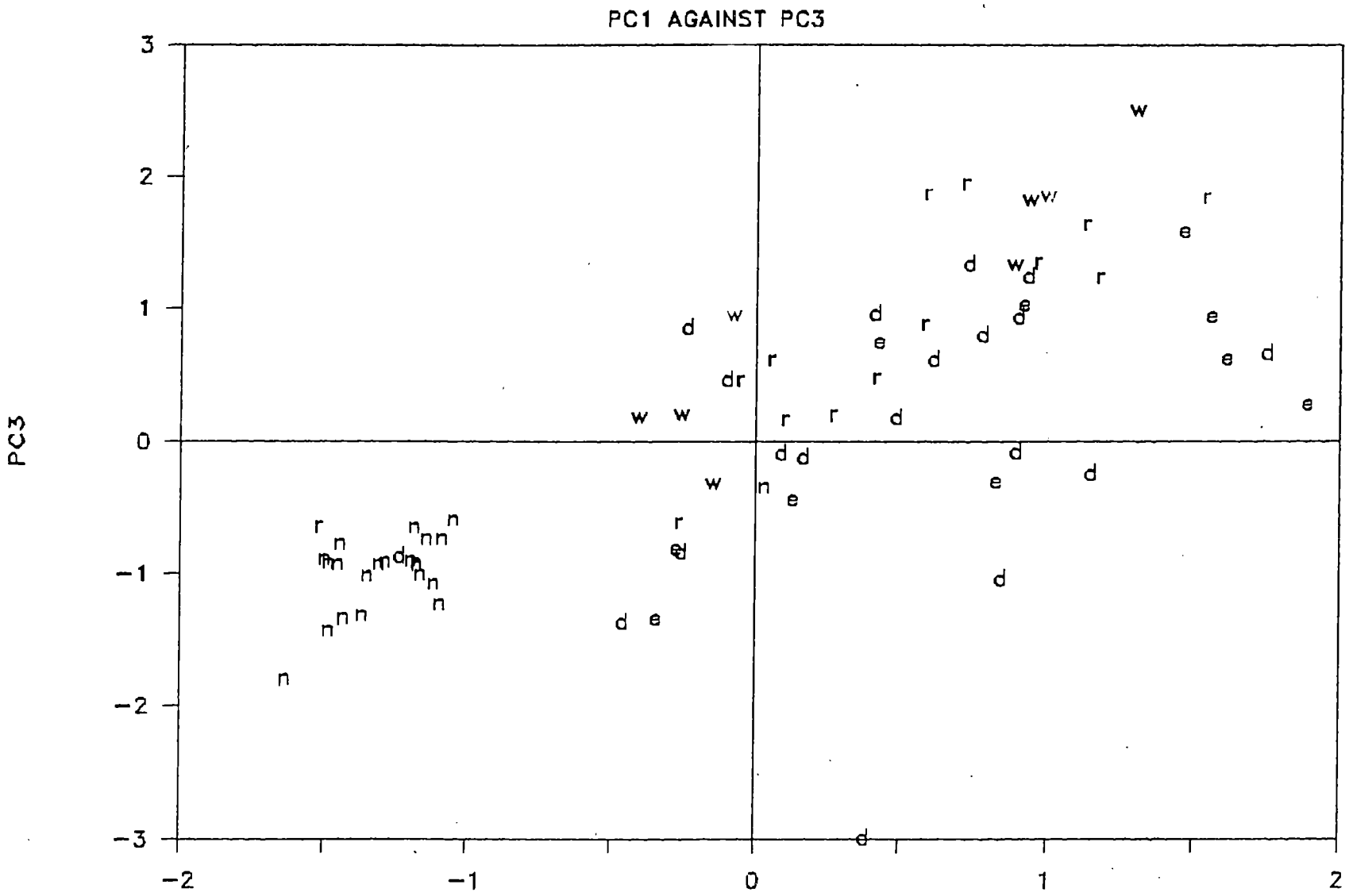

n- Non Beneficiary ; W- Deep Tube Well ; r- River Lift Irrigation ;
d- Shallow Tube Well (Disel) ; e- Shallow Tube Well (Electrified).

Fig-2

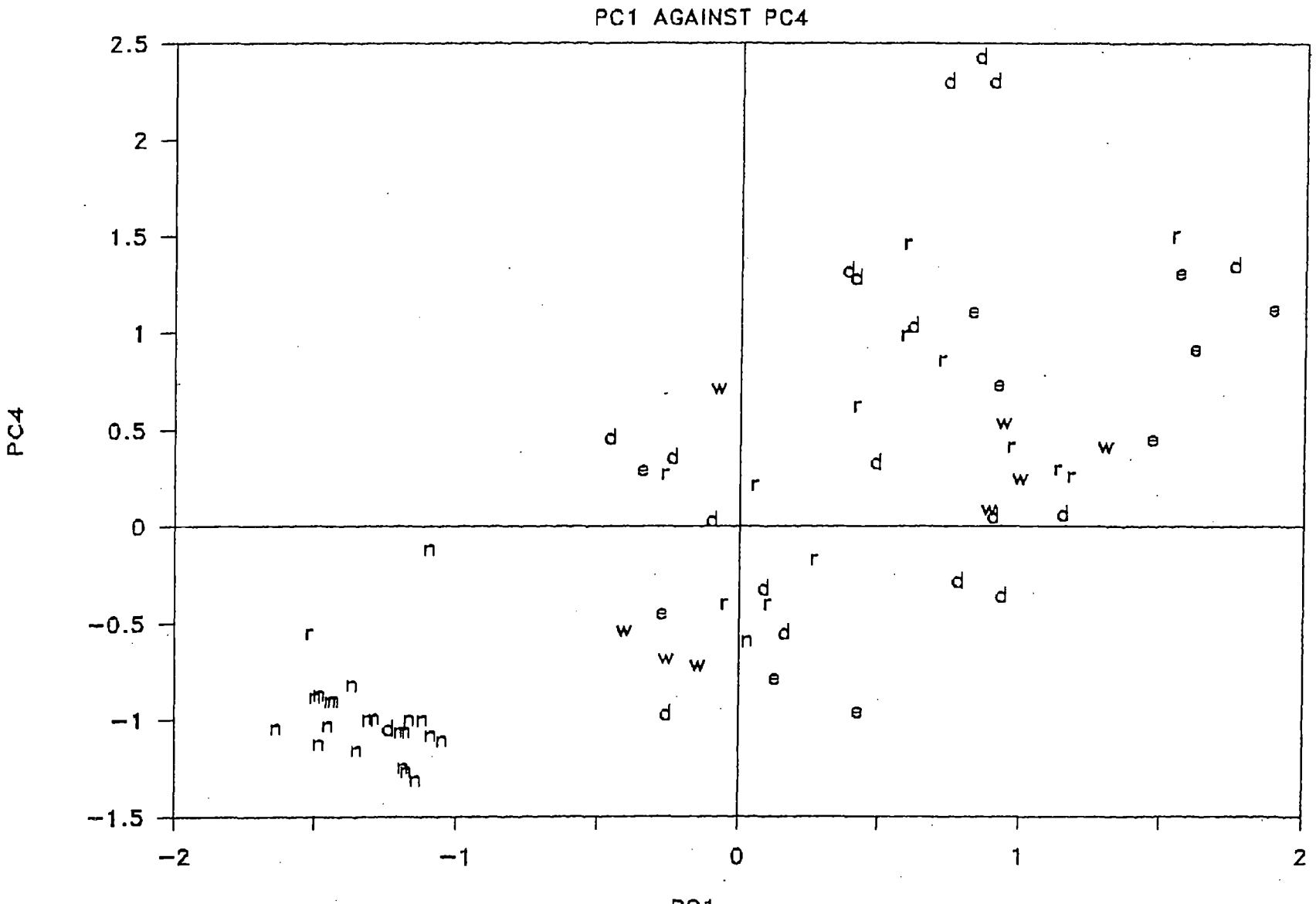

n- Non Beneficiary ; W- Deep Tube Well ; r- River Lift Irrigation
d- Shallow Tube Well (Disel) ; e - Shallow Tube Well (Electrified)

Fig-3

although their unit cost of irrigation is nearly similar. This pattern for energy cost is observed over all PCs.

STW(d) has greater intensities of input-use in pesticides and other miscellaneous inputs, and energy, where,however it has to bear the burden of significantly higher unit irrigation cost. Although high energy cost might also carry acreage implications, this conclusion is defeated by the fact that for STW(d) the score on *SEEDCOST* is low, as also for fertilizer costs/manure costs. Thus the high quantum of *ENERGYCOST* is mostly because of higher diesel cost in irrigation. Other schemes fare better as far as other input variables concerned.

Of the larger schemes, DTW(e) is intensive in its use of seeds, manure, pesticides, and to some extent, labour. Its main attribute is however labour use. RLI(d) is the other large scheme. Patterns for RLI(d) are similar to that of DTW(e) except when it comes to fertilizer-use, where RLI(d) shows higher intensities.

As a whole the energized sector, i.e. ALL(e) occupies a significantly better position compared to the diesel sector as a whole, because of the combined strengths of STW(e) and DTW(e) over a larger base of impact variables. This gives rise to the thought that this overall better performance may be explained by the price and substitution effects of lower energy costs for the energized sector.

Insofar as the diesel sector is concerned, investment on input use is high, particularly for STW(d); however, a large chunk of this investment goes to defray energy cost. For the energized sector on the other hand, lowered energy cost frees some of this investment for use on other agricultural inputs that lead to better performances for this sector. A case can thus be cogently established for electrification of existing diesel irrigation schemes, keeping in mind, especially, that with global scarcities of fossil fuels, diesel costs are prone to rise further.

Understanding of the broad patterns of impact-differentials evinced in the PC analysis is aided by looking at the PC-plots that accompany the chapter. Three plots have been generated for PC1 scores on PC2, PC3 and PC4 scores to offer a bivariate visual comparison of PC-SCORS over all 74 sample respondents. Vis-a-vis the control-group, i.e. the non-beneficiaries or those without recourse to any means of irrigation other than the traditional, it is seen that cultivators who have gone in for tubewell irrigation have made substantial forward progress in the use of agricultural inputs in general. This is abundantly clear from the PC-plots. The clustering therein is particularly interesting. While NB presents a more or less homogenous cluster with little outlier behaviour, the schemes themselves dissemble category-wise into much more scattered clusters. Outlier behaviour is most pronounced for the diesel schemes possibly on account of the more uncertain circumstances in which they operate.

4.6 Tentative Findings

In the analysis of scheme-wise differences in the use of agricultural inputs in the light of variations in investment behaviour of sample respondents, cost data have been used as a surrogate for data on physical input-use to circumvent problems of comparison that would have arisen because of the heterogeneity of the latter. Standardization procedures were necessary to reconcile different scales of measurement into a common measure of variance. The intrinsic

economic relationship explored by the PC-analysis was the conceptually basic one of input substitutability/complementarity. Theoretical inferences that can be drawn are of course contextual, and peculiar to the case being studied.

Sufficient evidence is found to establish that there are explicit differences in the input-mix pertaining to each irrigation scheme. Energy-costs of irrigation appear to play a significant part in the determination of this input-mix, this being evident from the findings that relate scheme-performances to scheme-category. It may be useful to indicate some of the underlying reasons accounting for this. In the course of the survey, it was noticed that seasonal preferences are exercised by the various categories of respondents. Boro and rabi are alternative seasons to a large extent, and boro cultivators tend to skip the pre-kharif season altogether. Mobility,too, appears to be an important factor - whereas the larger schemes are tethered to their respective spouts, leaving such land that is not in close proximity to the spout unirrigated, the smaller schemes have certain advantages in this respect. STW(d), particularly, is a case in point, as the same pump can be shifted at the cultivator's will to other spouts within his holding. STW(d) cultivators are thus observed to be very enterprising, although they are burdened by much higher energy costs. STW(e) cultivators, on the other hand, balance their somewhat restricted mobility by an intelligent choice of cropping season. A more detailed analysis of these seasonal differences are, however, beyond the scope of this paper, confined as it is to annual scenarios.

Certain methodological conclusions also follow. The use of multivariate methods of analysis is demonstrated to be a quick and effective way of pinpointing major determinants of the overall impact of irrigation. Regression analysis of the same would have been limited by serious multicollinearity problems that would have rendered OLS inapplicable. Sufficient indication of the extent to which multi-collinearity is present in the data is found in the covariant behaviour of the impact in the correlation matrix in Table 4.1. As the problem confronted by the study is not one of estimation but requires ranking of the differential impact, no information loss is embodied in its choice of methodology. More precision, when called for, can always be obtained by using recursive procedures to expostulate the results from Principal Components analysis to Factor Analysis. However, in the limiting case where the number of cost-variables is equal to the number of Factors, the Principal Components analysis corresponds to Factor Analysis results for the purpose of the present study, the ranking suffices to reach definite coclusions on differential scheme-performance and to the extension was beyond its scope.

4.7 Other Results

Although the standardisation of sample data was necessary for conducting PC analysis, one of the problems of such standardisation procedures is that the information content of the data series themselves is considerably reduced in order that better understanding is achieved of the intrinsic positions of various irrigation schemes in relation to the head of information covered by the questionnaire. An analysis of actual data is therefore also presented below .

It will be pertinent to mention the methodology followed in tabulation. Actual data were with reference to the four agricultural seasons and were collected over various crop-categories. Since the

interest of the study is in analysis of the comparative position of various schemes, the different crops were subsumed into four crop categories :

a) crops where qualitative modernisation of agricultural technology is involved i.e. crops involving HYV seeds, called 'Main' crop, for convenience,
b) crops where no qualitative changes in agricultural technology are involved i.e. crops whose identity remains intact between pre-irrigation and post-irrigation periods, called 'Traditional' crops for convenience,
c) crops of a subsidiary nature, often cash-crops, called 'Subsidiary' crops for convenience, that are further subdivided into,
   i) subsidiary crops no.1, denoted by 'Sub I' and
   ii) subsidiary crop no.2, denoted by 'Sub II'.

The above categorisation renders inter-seasonal comparison and aggregation of physical quantities possible, which would otherwise be a problem because of the peculiarities of the crop sown every season. It must be noted here that the classification does not however adhere to normal distinctions between food and non-food crops, with, for example, foodcrops being the main crop during the kharif season whereas during the rabi season the status of main crop being given basically to vegetables.

After tabulating all seasonal information under such crop categories the task of aggregation of seasonal into annual data becomes easy. Tables presented in the next few pages present various categories of information, with annual figures being arrived at by the above procedure. Seasonal information give some indication of differences in cropping, etc. Figures are in difference terms, representing variation between pre-irrigation and post-irrigation periods.

Table 4.7

Inter-Seasonal Profile of the Impact of Irrigation: by Crops

(Figures in Annual Incremental Terms)

	Acre		Labour Absopn.M		Labour Absopn.F		SeedCost		Manure Cost		Fertiliser Cost		Pest Cost		Other Cost	
	AnnAvg	AnnStd	AnnAvg	AnnStd	AnnAvg	AnnStd	AnnAvg	AnnStd	AnnAvg	AnnStd	AnnAvg	AnnStd	AnnAvg	AnnStd	AnnAvg	AnnSt
Main	5.70	4.74	157.30	109.00	26.19	21.71	948.38	1006.86	1804.73	1296.94	969.68	681.41	520.43	400.64	1162.86	776.
Trad	-2.90	2.61	-41.80	44.65	2.46	9.27	-78.78	285.66	-270.27	529.64	49.51	149.07	28.27	85.58	-186.35	323.
SubI	-0.04	0.91	5.00	42.98	7.18	14.70	74.89	350.06	115.95	518.42	107.72	197.80	102.01	166.07	97.43	337.
SubII	-0.64	1.00	-23.45	37.83	-0.93	5.54	-16.61	34.54	-49.59	142.69	-1.78	42.78	4.46	44.14	-108.35	188.

BORO

	Acre		Labour Absopn.M		Labour Absopn.F		SeedCost		Manure Cost		Fertiliser Cost		Pest Cost		Other Cost	
	AnnAvg	AnnStd	AnnAvg	AnnStd	AnnAvg	AnnStd	AnnAvg	AnnStd	AnnAvg	AnnStd	AnnAvg	AnnStd	AnnAvg	AnnStd	AnnAvg	AnnS
Main	0.98	1.36	29.73	39.68	6.07	8.37	45.88	60.06	393.24	533.81	160.68	217.06	44.26	63.99	175.68	226.
Trad	-	-	-	-	-	-	-	-	-	-	-	-	-	-	-	-
SubI	-	-	-	-	-	-	-	-	-	-	-	-	-	-	-	-
SubII	-	-	-	-	-	-	-	-	-	-	-	-	-	-	-	-

(continued in next page)

PRE-KHARIF

	Acre		Labour Absopn.M		Labour Absopn.F		SeedCost		Manure Cost		Fertiliser Cost		Pest Cost		Other Cost	
	AnnAvg	AnnStd	AnnAvg	AnnStd	AnnAvg	AnnStd	AnnAvg	AnnStd	AnnAvg	AnnStd	AnnAvg	AnnStd	AnnAvg	AnnStd	AnnAvg	AnnStd
Main	0.82	1.17	22.23	28.71	1.77	4.57	32.16	42.13	98.99	170.87	61.23	83.99	7.70	32.67	-66.96	168.86
Trad	-0.41	1.07	-13.85	29.43	1.46	4.61	-7.16	43.47	-39.86	143.57	19.80	64.19	14.86	50.83	19.53	126.11
SubI	0.05	0.56	3.70	23.54	0.36	9.07	5.55	26.06	5.61	93.82	11.42	43.66	4.46	44.14	-108.35	188.32
SubII	-0.64	1.00	-23.45	37.83	-0.93	5.54	-16.61	34.54	-49.59	142.69	-1.78	42.78	125.68	167.46	337.23	445.79

KHARIF

	Acre		Labour Absopn.M		Labour Absopn.F		SeedCost		Manure Cost		Fertiliser Cost		Pest Cost		Other Cost	
	AnnAvg	AnnStd	AnnAvg	AnnStd	AnnAvg	AnnStd	AnnAvg	AnnStd	AnnAvg	AnnStd	AnnAvg	AnnStd	AnnAvg	AnnStd	AnnAvg	AnnStd
Main	2.51	2.58	28.11	33.60	6.74	7.59	43.51	41.29	89.19	300.93	193.51	177.50	57.53	67.59	286.89	268.26
Trad	-2.39	2.14	-20.88	26.53	1.20	7.54	-9.59	50.73	-175.00	470.25	46.68	100.36	26.85	73.92	-69.05	234.15
SubI	0.09	0.35	2.93	13.77	2.77	6.21	9.12	26.09	41.89	155.53	30.76	70.00	14.45	39.25	56.00	156.00
SubII	-	-	-	-	-	-	-	-	-	-	-	-	-	-	-	-

RABI

	Acre		Labour Absopn.M		Labour Absopn.F		SeedCost		Manure Cost		Fertiliser Cost		Pest Cost		Other Cost	
	AnnAvg	AnnStd	AnnAvg	AnnStd	AnnAvg	AnnStd	AnnAvg	AnnStd	AnnAvg	AnnStd	AnnAvg	AnnStd	AnnAvg	AnnStd	AnnAvg	AnnStd
Main	1.39	1.17	77.23	52.88	11.61	11.44	826.82	961.18	1223.31	899.81	554.26	396.92	399.74	321.28	574.62	402.89
Trad	-0.10	0.24	-7.07	16.86	-0.20	1.73	-62.03	277.01	-55.41	155.96	-16.96	50.93	-6.28	26.90	-50.34	123.06
SubI	-0.17	0.65	-1.64	36.39	4.04	9.56	60.22	350.25	68.45	486.87	65.54	179.19	72.70	144.20	21.82	278.58
SubII	-	-	-	-	-	-	-	-	-	-	-	-	-	-	-	-

Source : Sample Survey

Table 4.7 presents the complete inter-seasonal profile of differential impact of the introduction of irrigation, in per capita (or average) terms. Standard deviations are indicated alongside so that an idea of the dispersion of the data is also available. Multiple cropping exists in all seasons except boro where the single crop is boro rice which is entirely irrigation-dependent and hence was not sown in the pre-irrigation period. A second subsidiary crop or sub II is only sown in the pre-kharif season, with kharif and rabi seasons being limited to three crops. Negative figures are for negative impact and thus represent shift variables generated by shift in cropping patterns resultant to irrigation. Such shifts are most pronounced for the trad crop and, to a lesser extent, for the sub II crop, indicating a shift, at least on the part of sizeable number of cultivators, to the rabi-boro combination.

Study of the table shows highest impact for the main crop in terms of acre sown, with traditional subsidiary cropping all being marked by negative shifts in annual terms. Changes in use of other inputs follow thereon, although positive impacts are generally obtained for the sub I crop indicating, perhaps, that some of the irrigation potential is shifted to at least one cash crop.

In terms of labour utilisation, variant patterns are found between male and female labour, which will be analysed in depth later on. However, female labour seems to have stepped into the shoes of male labour especially in the trad and sub I crops - male labour being applied in a larger measure to the main crop.

Table 4.8

Seasonwise Net Impact

	Acre	LabAbspM	LabAbspF	SeedCost	ManurCost	FertCost	PestCost	OthCost
BORO	0.98	29.73	6.07	45.88	393.24	160.68	44.26	175.68
PREKHF	-0.18	-11.36	2.66	13.95	15.14	90.66	54.93	-30.11
KHF	0.20	10.16	10.72	43.04	-43.92	270.95	98.82	273.92
RABI	1.12	1419.88	15.45	825.01	1236.35	602.84	457.16	546.11
ANNUAL	2.12	1448.41	34.89	927.88	1600.81	1125.12	655.18	390.98

Source : Sample Survey

Manure-, fertilizer- and pesticide-use, on the other hand, generally show positive impact which, combined with acreage shifts mentioned above, indicates better application of the same to all crops. Table 4.8 is derived from Table 4.7 in net terms, i.e. after subsuming the negative shifts into the net averages.

Table 4.9

Comparative Features of Pre- and Post-Irrigation Profiles

	CROP POST			CROP PRE					DIFFERENCE (in Annual Terms)		
	POSTAVG	POSTSTD	POSTSUM	PREAVG	PRESTD	PRESUM	SUMDIFF	NETSUM	ANNUALAVG	ANNUALSTD	ANNUALSUM
MainAcre	6.52	5.15	482.7	0.82	1.65	61	421.7	156.74	5.71	4.74	422.34
TradAcre	2.12	2.55	156.73	5.02	2.20	371.3	-214.57		-2.82	2.70	-208.50
SubIAcre	0.58	0.87	43.01	0.62	0.93	46.15	-3.14		-0.02	0.93	-1.78
SubIIAcre	0.11	0.38	8.16	0.75	0.98	55.41	-47.25		-0.59	1.08	-43.89
MainLabAbspM	176.49	117.26	13060	19.19	30.22	1420	11640	7182	155.38	108.87	11497.77
TradLabAbspM	42.12	40.50	3117	83.92	33.33	6210	-3093		-39.60	45.24	-2930.19
SubILabAbspM	36.58	47.69	2707	31.58	42.46	2337	370		5.87	43.52	434.54
SubIILabAbspM	5.34	18.07	395	28.78	31.75	2130	-1735		-22.13	38.22	-1637.96
MainLabAbspF	27.11	21.96	2006	0.92	3.20	68	1938	2582	25.48	20.98	1885.22
TradLabAbspF	7.89	8.84	584	5.43	6.55	402	182		2.57	9.28	190.00
SubILabAbspF	9.49	12.26	702	2.31	8.77	171	531		7.26	14.67	537.45
SubIILabAbspF	0.89	3.34	66	1.82	4.04	135	-69		-0.93	5.54	-69.00
MainSeedCost	984.12	1002.44	72825	35.74	118.09	2645	70180	68663	933.54	998.28	69081.89
TradSeedCost	76.49	73.46	5660	155.27	270.33	11498	-5838		-75.74	286.07	-5604.81
SubISeedCost	98.86	348.89	7316	23.97	41.63	1774	5542		75.66	349.96	5599.82
SubIISeedCost	6.35	21.58	470	22.96	25.24	1699	-1229		-15.58	34.72	-1152.93
MainManurCst	1936.49	1371.87	143300	131.76	222.67	9750	133550	118468	1785.36	1301.59	132116.42
TradManurCst	339.86	395.65	25150	610.14	345.46	45150	-20000		-255.50	533.38	-18906.77
SubIManurCst	400.00	643.54	29600	284.85	430.94	21020	8580		121.00	519.09	8953.76
SubIIManurCst	24.32	97.00	1800	73.92	96.17	5470	-3670		-46.46	143.55	-3437.76
MainFertCst	1007.45	707.00	74551	37.77	67.56	2795	71756	83259	960.15	683.40	71850.77
TradFertCst	123.99	125.53	9175	74.47	71.01	5511	3664		51.92	148.51	3841.98
SubIFertCst	179.88	249.07	13305	72.08	126.59	5334	7971		109.26	197.40	8085.43
SubIIFertCst	8.99	34.68	665	10.77	22.48	797	-132		-0.74	42.41	-54.89
MainPestCst	526.20	404.67	38939	5.77	18.22	427	38512	48483	509.84	396.18	37728.09
TradPestCst	37.96	79.41	2809	9.69	28.79	717	2092		28.27	85.58	2092.01
SubIPestCst	116.27	178.19	8604	14.26	31.95	1055	7549		104.17	165.77	7708.64
SubIIPestCst	9.32	36.84	690	4.86	22.38	360	330		4.46	44.14	330.01
MainOthCst	1293.68	818.59	95732	130.81	188.97	9680	86052	71454	1147.01	778.25	84878.84
TradOthCst	340.68	320.85	25210	527.03	282.14	39050	-13798		-173.35	325.65	-12828.06
SubIOthCst	315.20	381.06	23325	217.77	282.55	16115	7210		103.59	340.11	7665.89
SubIIOthCst	28.18	95.30	2085	136.53	152.22	10103	-8018		-101.04	188.33	-7477.05

Source : Sample Survey.

Table 4.9 provides for comparison of a tabular listing of annual actual figures for pre-irrigation and post-irrigation periods. The information covers annual-sum and annual-averages to provide both aggregate and per capita profiles, with the annual standard deviation figure providing an indication of the dispersion thereon. Analysis of the shifts of Table 4.7 may be made by comparing pre-and post-irrigation situations in Table 4.9 The sum figures are an assessment of the total input in non-relative terms i.e. independent of differential impact. The difficulties relating to units and scales of measurements, alluded to earlier in the chapter, can be seen therein and it is clear why standardisation of the data was necessary prior to Principal Component analysis. The figures, of course, pertain to the sample as a whole with no distinction between scheme categories.

Table 4.10

Schemewise Annual Impact

(Figures in Average terms)

	NB	RLI	STW(d)	STW(e)	DTW(e)	STW(e)+DTW(e)	ANNUAL
MainAcre	0.40	6.97	7.22	10.02	9.07	9.53	5.71
TradAcre	-0.59	-2.95	-3.95	-4.82	-3.37	-4.19	-2.82
SubIAcre	-0.10	-0.03	0.30	-0.51	-0.01	-0.29	-0.02
SubIIAcre	-0.37	-0.65	-0.58	-1.24	-0.27	-0.83	-0.59
MainLabAbspM	23.41	206.07	204.25	231.00	210.53	222.93	155.38
TradLabAbspM	-12.82	-48.86	-53.60	-61.50	-35.40	-49.57	-39.60
SubILabAbspM	-6.64	8.50	9.30	2.60	30.22	15.31	5.87
SubIILabAbspM	-20.50	-24.64	-19.20	-42.00	-4.06	-25.44	-22.13
MainLabAbspF	4.23	33.29	30.20	39.50	41.16	40.12	25.48
TradLabAbspF	10.68	1.43	-1.95	-1.90	-0.56	-1.44	2.57
SubILabAbspF	-2.32	10.00	14.15	11.40	6.83	9.19	7.26
SubIILabAbspF	-1.91	-0.93	0.35	-2.10	0.79	-1.17	-0.93
MainSeedCost	6.36	1291.07	1227.50	1475.50	1447.48	1462.05	933.54
TradSeedCost	42.27	-139.14	-175.15	-68.20	-51.91	-60.21	-75.74
SubISeedCost	-7.05	281.21	73.05	33.80	10.48	19.78	75.66
SubIISeedCost	-13.27	-18.57	-13.10	-36.20	4.07	-16.83	-15.58
MainManurCst	164.77	2637.50	2207.50	2550.00	2774.17	2634.25	1785.36
TradManurCst	-25.91	-144.29	-493.00	-432.50	-281.19	-358.71	-255.50
SubIManurCst	-51.14	300.00	223.50	-16.00	198.42	78.26	121.00
SubIIManurCst	-52.73	-44.64	-49.25	-82.50	33.92	-37.10	-46.46
MainFertCst	79.32	1328.93	1237.30	1585.50	1253.22	1441.93	960.15
TradFertCst	182.50	12.50	-18.50	-19.00	29.73	1.22	51.92
SubIFertCst	19.09	140.71	177.50	117.60	129.45	119.19	109.26
SubIIFertCst	1.82	-1.21	-3.75	-17.00	25.77	-0.16	-0.74
MainPestCst	25.00	733.93	752.45	677.30	628.52	658.56	509.84
TradPestCst	74.32	12.14	12.95	-6.20	15.00	1.56	28.27
SubIPestCst	9.09	157.14	153.45	88.50	172.39	124.42	104.17
SubIIPestCst	3.41	5.00	13.75	-18.00	15.00	-5.00	4.46
MainOthCst	167.05	1497.86	1548.25	1665.00	1575.83	1626.05	1147.01
TradOthCst	86.14	-255.00	-268.50	-408.00	-214.88	-321.28	-173.35
SubIOthCst	-18.64	168.93	202.75	30.50	159.97	91.99	103.59
SubIIOthCst	-87.27	-128.57	-78.75	-222.30	8.73	-121.22	-101.04

Source : Sample Survey

Such distinction is made in the subsequent tables which are in difference terms. Table 4.10 repeats schematic averages on the structure of Table 4.7, above, against the annual averages. It can be seen from the table that whereas all irrigation schemes record positive average impact as far as additional acreage and male labour absorption are concerned, these figures are negative for non-beneficiaries indicating leasing-out of their land and labour to the scheme-holders. The point is taken up in the analysis of labour impact in the subsequent chapter. Although average land-use has declined for non-beneficiaries, it is seen that the average impact on their use of other agricultural inputs is positive. These appears to show that, in proximity with scheme- beneficiaries, the non-beneficiaries also absorb, in part, the technological changes resulting from irrigation insofar as these are independent of irrigation itself. However such absorption occurs along the intensive margin leading to higher input commitments to a reduced quantum of land. For scheme- beneficiaries, the impact is along both intensive and extensive margins, as the additional acreage figures indicate. Thus not all the incremental input-use is committed to incremental land; some part of this is applied to the some acreage that was previously cultivated in the pre-irrigation situation. The impact of irrigation, both direct, and indirect (on non-beneficiaries), has been to enhance overall agricultural input-use per unit of cultivated land.

However, differences between schemes are found to exist, which are evident in the table. It can again be noted that additional input-use does not bear any hard and fast relation to incremental acreage since, although a wide difference of upto 2.41 acres per capita separates DTW(e), with the highest incremental land, from STW(d), with the lowest, differences in input-use are not so marked, strengthening the hypothesis that the impact of irrigation is along intensive as well as extensive margins.

Table 4.11 presents the annual impact figures of the Table 4.10 in cost terms. Column-totals represent per capita incremental cost outlays and standard deviations thereof. Percentage outlays are also indicated by the bracketed figures. A large variation is seen between per capita cost outlays for scheme-beneficiaries versus non-beneficiaries, with each scheme-holder investing Rs. 11,000+ as against to a mere Rs. 660 for each non-beneficiary. Among the beneficiaries highest outlay is made by STW(d), although as much as 17.78 % of this is by way of energy costs. Energy costs for RLI(d) and DTW(e) are much lower. Separately indicated in the table are also the adjusted figures for input costs exclusive of energy cost, where it is seen that STW(d) outlays declined considerably. For the electrified sector as a whole, outlays are substantially in excess of those for the diesel sector.

Table 4.11

The Annual Impact : Per Capita Incremental Cost & Percentage Outlays

	NB		RLI(d)		STW(d)		STW(e)		DTW(e)		STW(e)+DTW(e)		ANNUAL	
	Avg	STD	Avg	STD	Avg	STD	Avg	STD	Avg	STD	Avg	STD	Avg	STD
Total Acre	-0.66	0.90	3.34	2.33	2.99	2.06	3.45	2.38	5.20	3.67	4.23	3.15	2.27	2.94
%	(-0.10)		(0.03)		(0.03)		(0.03)		(0.04)		(0.04)		(0.03)	
TotalLabourCost	55.68	677.75	2735.82	1590.19	2834.35	1363.21	2816.49	1385.45	3457.54	1456.00	3101.40	1452.60	2854.58	1826.76
%	(0.43)		(24.69)		(24.37)		(25.33)		(29.57)		(27.27)		(25.05)	
TotalSeedCost	28.32	235.83	1414.57	1109.31	1112.30	994.97	1404.90	971.24	1400.15	924.40	1402.79	950.71	917.00	1042.16
%	(4.29)		(12.77)		(9.56)		(12.63)		(11.98)		(12.33)		(11.19)	
TotalManureCost	35.00	589.39	2748.57	1146.09	1888.75	1285.92	2019.00	1169.76	2688.83	1000.42	2316.70	1178.89	1604.40	1485.96
%	(5.30)		(24.80)		(16.24)		(18.16)		(23.00)		(20.37)		(19.56)	
TotalFertiliserCost	282.73	201.92	1480.93	524.15	1392.55	506.18	1666.30	462.53	1432.04	437.98	1562.18	466.54	1120.58	697.84
%	(42.70)		(13.36)		(11.97)		(14.98)		(12.25)		(13.73)		(13.66)	
TotalPestCost	111.82	167.37	900.21	298.00	932.60	503.09	741.60	276.67	826.97	325.77	779.54	302.48	646.74	490.39
%	(16.92)		(8.20)		(8.02)		(6.67)		(7.07)		(6.85)		(7.00)	
TotalOtherCost	147.27	312.35	1283.21	381.14	1403.75	500.49	1065.20	606.72	1538.45	456.75	1275.53	640.32	976.21	736.90
%	(22.29)		(11.50)		(12.07)		(9.50)		(13.16)		(11.21)		(11.90)	
EnergyCost	0.00	0.00	510.09	376.03	2067.00	1892.01	1406.53	560.49	347.43	192.52	935.02	604.00	003.02	1321.70
%			(4.60)		(17.70)		(12.65)		(2.97)		(0.23)		(10.76)	
TotalCost	660.02	1522.21	11001.41	4322.43	11632.10	4676.05	11120.02	3556.00	11691.41	4002.72	11373.97	3010.10	0203.42	6145.53
%	100		100		100		100		100		100		100	
NetLabourCostMale	-109.16	617.96	2231.40	1524.66	2305.24	1219.92	2219.40	1243.02	2003.30	1233.60	2505.50	1279.53	1622.22	1622.06
%	(-16.52)		(20.14)		(19.02)		(19.96)		(24.49)		(22.03)		(19.77)	
NetLabourCostFemale	164.05	102.92	504.34	247.64	529.11	312.50	597.00	275.14	594.24	350.15	595.02	314.75	432.36	310.25
%	(24.95)		(4.55)		(4.55)		(5.37)		(5.00)		(5.24)		(5.27)	

Source : Sample Survey.

A study of deviation figures brings new facts lights. For example, a markedly high standard deviation is encountered for STW(d) as far as energy costs are concerned. For the other schemes deviations are much less although RLI(d) figures do indicate wider dispersions. This would bear out the observation on greater outlier behaviour in the diesel sector compared to the electrified sector made in the Principal Component analysis. For indexing purposes, another ratio has also been provided, namely the incremental cost:incremental acreage ratio. It is seen here that these ratios are higher for the diesel sector then for the electrified sectors, thus revealing that there is a difference is margins amongst this two sectors : whereas the electrified sector invests along the extensive margin, that diesel sector is more concerned with the intensive margin. It must be remembered, however, that these ratios are obtained on incremental rather than total acreage and therefore tell only a part of the story. Taking into account greater dispersion for the diesel sector, these ratios would also be subject to greater variation for RLI(d) and STW(d) schemes

whereas the Allscheme ratio has been adjusted to exclude (zero) energy costs for non-beneficiaries and to subsume their (negative) incremental acreage. Comparing over all schemes STW(e) lays greatest emphasis on fertiliser use, a finding common to the earlier PC analysis, and furthermore, its high seedcost outlay will also point to greater acreage sown relative to STW(d). Percentage distribution indicate schemewise focus over the input-use components.

A question might be raised as to why schemewise differences should exist and as to how they surface. For an answer to such questions, the annual picture is not sufficient. It had earlier been remarked during the PC analysis that scheme-holders optimise their annual investment activity by an intelligent choice of cropping season that somehow reflects on their inherent cost structure, particularly that of energy cost. Table 4.12 pertain to a demonstration of this behaviours through presentation of seasonal factors in cost terms.

Table 4.12

Seasonwise & Schemewise Investment Pattern

(in average cost terms)

	BORO NB	RLI	STW(d)	STW(e)	DTW(e)	STW(e)+DTW(e)	AllScheme
Acre	0.00	0.73	0.86	2.96	1.91	2.49	0.98
LabAbspM	0.00	27.86	27.25	82.00	55.63	70.28	29.73
LabAbspF	0.00	4.64	5.75	16.50	13.00	14.94	6.07
SeedCost	0.00	45.00	42.50	114.50	96.25	106.39	45.88
ManurCost	0.00	364.29	370.00	1140.00	650.00	922.22	393.24
FertCost	0.00	135.71	147.50	511.50	240.63	391.11	160.68
PestCost	0.00	38.57	41.00	124.00	84.38	106.39	44.26
OthCost	0.00	164.29	171.25	452.50	343.75	404.17	175.68

	Pre-Kharif NB	RLI	STW(d)	STW(e)	DTW(e)	STW(e)+DTW(e)	AllScheme
Acre	-0.16	0.33	0.23	-1.70	-0.28	-1.07	-0.18
LabAbspM	-23.23	-9.36	7.55	-37.00	2.50	-19.44	-11.36
LabAbspF	0.23	1.29	5.00	2.00	6.75	4.11	2.66
SeedCost	9.45	8.36	35.75	-23.40	28.25	-0.44	13.95
ManurCost	-13.18	75.36	44.50	-121.00	84.38	-29.72	15.14
FertCost	77.27	88.79	125.05	57.00	86.88	70.28	90.66
PestCost	15.68	59.64	106.50	11.50	88.00	41.94	54.93
OthCost	-62.50	-49.29	74.25	-207.00	53.75	-91.56	-30.11

	Kharif NB	RLI	STW(d)	STW(e)	DTW(e)	STW(e)+DTW(e)	AllScheme
Acre	-0.56	0.52	0.77	0.94	0.29	0.65	0.20
LabAbspM	-1.05	17.86	33.29	-4.90	-1.88	-3.56	10.16
LabAbspF	8.00	12.29	13.32	11.60	10.50	11.11	10.72
SeedCost	35.23	45.36	75.97	34.50	0.63	19.44	43.04
ManurCost	-9.09	123.21	-58.13	-235.00	-31.25	-144.44	-43.92
FertCost	167.05	325.36	332.19	333.00	242.13	293.06	270.95
PestCost	80.23	91.07	124.90	93.60	119.38	105.06	98.82
OthCost	149.53	331.43	501.55	179.50	111.88	149.44	273.92

(continued in next page)

	Rabi NB	RLI	STW(d)	STW(e)	DTW(e)	STW(e)+DTW(e)	AllScheme
Acre	0.06	1.77	1.47	1.25	1.85	1.52	1.12
LabAbspM	7.73	184.71	76.50	90.00	125.63	105.83	68.53
LabAbspF	2.45	25.57	19.75	16.00	21.20	18.67	15.45
SeedCost	-16.36	1315.86	962.00	1279.38	1367.50	1318.50	825.01
ManurCost	57.27	2185.71	1583.00	1235.00	1952.50	1553.89	1236.35
FertCost	38.41	931.07	792.75	764.00	904.38	826.39	602.04
PestCost	15.91	718.93	666.00	512.50	621.25	560.83	457.16
OthCost	60.23	836.79	675.75	641.00	931.88	769.83	546.11

Source : Sample Survey.

Before discussion of the seasonal variations, it is useful to point out that the lowest irrigation impact on whole would be recorded for the kharif season because this season coincides with the primarily rain-fed cultivation season of pre-irrigation times. Highest impact, on the other hand, would be felt during the dry months of the rabi and boro seasons. This, in fact, is borne out in the data.

Table 4.12 for the boro season shows a clear demarcation between preferences of the diesel as against the electrified sector. In acreage terms, the electrified schemes cover the largest component of their incremental acreage during this season. Correspondingly, input-use and by implication, cost outlays thereon are also markedly high for the electrified schemes. Boro cultivation did not exist prior to irrigation and comprises, entirely, the cultivation of highly resource-intensive and highly-productive boro rice that is all of the HYV type. Marketing of boro rice takes place in a sellers' market with commensurately higher prices, unlike kharif rice that often reaches the market under glut conditions. STW(d) and DTW(e) farmers therefore seek maximum returns for their scheme-investment by devoting exclusive attention on boro rice. Because of the water-intensive nature of rice cultivation a significant utilisation of irrigation capacity must be made during this season, with the number of times the crop has to be irrigated being as high as 15 to 20 times per cropping season. This obviously gives the electrified sector a cost advantage relative to STW(d) for whom the energy cost of such irrigation would prove to be prohibitive, with its per acre energy cost at Rs.63. Regarding RLI(d), the explanation is more complex and is not entirely carried by the figures. Boro rice, being non-traditional and practically unheard of in earlier times, requires the will to experiment on the part of cultivator. RLI(d) scheme-holders who otherwise have favourable cost structures, have been shown to lack that element progressivism during the PC analysis. Hence in their case, the problem is probably transitional - before committing themselves to the characteristically high outlays required boro rice, they have chosen to adopt caution while waiting for a demonstration of the benefits from such cultivation. Although a similar explanation might also have been offered for the obvious reluctance of STW(d) cultivators, this is evidently not so from the fact that they are generally progressive and that, inspite of the high irrigation cost they do participate in boro cultivation to a larger extent than RLI(d).

Coming to table 4.12 which relates to the now-outmoded pre-kharif season, it is seen that the diesel schemes are the only significant participants in cultivation during this season. Cropping during pre-kharif season is much less water-intensive with only 2-6 irrigations

being required. STW(d) thus finds justifications for incrementing cultivation activity during this season, when it can use to good effect the lingering soil fertility produced by heavy input application during the rabi season. The electrified schemes are already heavily committed to the boro season which overlaps into the pre-kharif season. The negative average over all schemes also points to the general marginalisation of pre-kharif cropping, although higher application of inputs such as fertiliser, manure and pesticides are still reported.

Table 4.13 represents scheme profiles during the kharif season, where irrigation has lowest impact. Nevertheless greatest acreage increments are reported by the small schemes. Certain explanatory details must be noted before entering the data in the table. Analysis of the kharif data by crop i.e. 'main' versus 'trad' versus 'sub I', showed that although the general impact of irrigation has been to generate a shift from traditional indigenous cropping to HYV, schemewise shift patterns have differed. STW(d) is a case in point: the data for kharif with cropwise break-up showed a greater tendency on the part of STW(d) towards retention of indigenous acreage. This is borne out in Table 4.13 in the seed quantity, manure and fertiliser figures. Whereas seed requirements for HYV are lower, STW(d) shows enhancement in incremental seed quantities in contrast to all other schemes where this increment is negative. The drop in manure-use is also less marked for STW(d) while it is very high for the electrified schemes. Fertiliser-use, in incremental terms, is also relatively low for STW(d) compared to STW(e). Since labour requirements per acre are higher for the 'trad' crop, the increment in male labour absorption is substantially high for STW(d). This applies, although in a slightly restricted sense, to RLI(d) where also the shift from indigenous to HYV crops is weaker then for the electrified sector. Thus in the table, increments in male labour absorption are positive for the diesel sector and negative for STW(e) and DTW(e) - this despite the fact that acreage responses for the electrified sector are markedly strong. Further confirmation of this was found in the standard deviation for male labour absorption : in the case of diesel schemes much higher standard deviations attend to the average incremental figures than in the case of the electrified sector, particularly STW(e). On the average male labour increment for STW(d) of 33.29 man-days, the standard deviation is of the order 30, indicating highly-dispersed responses. This point had earlier been touched upon in the comments on outlier behaviour, in the PC analysis. Standard deviation figures are available in the section pertaining to labour impact, in the next chapter.

The rabi season, figures for which are tabulated in Table 8.4, is a season of uniformly high cultivator activity as far as all irrigation schemes are concerned. However, the larger schemes i.e. DTW(e) and RLI(d) report relatively higher acreage increments. Additional acreage, between STW(d) and STW(e), is lower for the latter. Labour man-day creation is more complex, with non-uniform variations between male versus female labour absorption. For instance, male labour absorption is higher for STW(e) than for STW(d), but in the case of female labour an opposite pattern prevails. So also between RLI(d) and DTW(e), DTW(e) also shows the highest incremental acreage, overall, in the rabi season, but comparison with RLI(d) places the latter in a better position as far as most inputs are concerned. The bulk of annual manuring is done during the rabi season where the crop consists entirely of vegetables except for some rare instances of wheat. Cooch Behar of course is not traditionally either

a wheat-producing or a wheat-consuming area. The choice of the appropriate vegetable-crop by different scheme-holders is thus guided by considerations of risk, marketability and price volatility etc. There has been a tendency for cultivators in the district to diversify from potatoes to green vegetables concomitant to the growth of the urban markets. The disease-proneness of the potato crop is an added risk factor therein, although a steadier price is guaranteed.

From the table, the highest cropping shift to green vegetables is revealed by the diesel schemes, thus explaining lower seed requirement. The electrified schemes show lesser shifts and still concentrate heavily on potatoes. For added clarity, the table also includes an entry for average seed costs which resolves this point of confusion, and considerably reduces the apparent dissimilarities between diesel and electrified schemes into a more compatible set of cost figures.

4.8 Conclusions

The study of average seasonal responses throws light on differential behaviour of scheme-beneficiaries which explain their relative standings in the PC-scores. Since each irrigation scheme is subject to its own ordered constraints relating to investment capacities, a primary determinant of which is the energy cost embodied in the scheme, cultivators seek optimise annual performance and thus earnings, by recourse to specialised cropping patterns and to seasonal choice. On the whole, the performance of the electrified sector, particularly of STW(e), is significantly better; this is borne out in both the PC-analysis and the analysis of averages. In the diesel sector, STW(d) is an active participant throughout the agricultural year, faced though it is by the burden of heavy energy cost. RLI(d) is less progressive on the whole, which is why it has not been able match up to the progress achieved by STW(e), with the comparable energy cost, or the other schemes. In general progressive electrificaton of the diesel schemes would first of all produce significant positive impact on the performances of the cultivators who are presently STW(d) beneficiaries, eventually followed, through demonstration, by the present RLI(d) beneficiaries. Also, an accelerated programmes of rural electrification would see highly productive use being made of electricity as an energy source for irrigation, at the same time bringing more and more of the present non-beneficiary group into progressive agriculture.

Although overall features of the research study are by and large covered in the present chapter insofar as they pertain to broad agrarian impact of electricity use, certain interesting features that broaden the study framework into well-defined extensions are the subjects of the subsequent chapter. These pertain to labour impact, land-use dynamics and specialised energy impact. These extensions are broadly independent of the PC analysis that forms the core of the present chapter.

CHAPTER V

EXTENSIONS FROM THE SAMPLE-STUDY

5.1 The Labour Impact

Because of the general progressiveness imparted to agriculture by irrigation, a major feature of agricultural development is the creation of labour demand. The sample survey elicited information from respondents on labour-use both in the pre-irrigation and post-irrigation situations. Although basic input-relations, of which labour is a part, have already been dealt within the previous chapter, the study can be fruitfully extended to an analysis of the labour-impact of irrigation, per se. In doing so the differential responses to labour absorption by scheme-category, are brought to light.

Patterns evinced in the labour-impact of irrigation, when studied in terms of incremental labour utilisation, possess two aspects. These are, namely, that additional man-days are created by the extension of cropping into the dry months, and that shifts in seasonal cropping patterns (also alluded to in the previous chapter) bring about shifts in labour allocation per crop, particularly between male and female labour. Since the study is by scheme-category, the findings are relevant to assessment of the total impact of energisation, and more specifically, electrification of the irrigated sector.

Data from the study is presented primarily in annual terms by means of seasonal aggregation although reference will be made to seasonal patterns in the analysis of labour shifts. It may, however, be noted that the annual crop-classification of 'Main','Trad','SubI' and 'SubII' is a theoretical construct made for convenience in aggregation and does not carry any specialised meaning beyond that. Thus a shift of labour from 'Trad' to 'Main' is the result of decrease in agricultural emphasis on the cultivation of indigenous crop varieties, concomitant to new emphasis on HYV types.

Actual figures for per acre incremental labour utilisation are presented in annual terms in Table 5.1. The table provides a break-up of labour utilisation for both male and female labour over the four classified crops, aggregated over the four agricultural seasons, i.e. boro, pre-kharif, kharif and rabi. Impact figures are provided in both aggregates (sum) and averages over the different respondent categories, with the Allscheme figures displaying total impact over the entire sample. Since the table is in difference terms (between pre-irrigation & post-irrigation periods), each set of figures can be positive or negative, depending on the direction of impact. Average impact per respondent is displayed in the average figures. Net labour absorption figures, both for males and females are obtained by summing the break-up figures by sex.

Table 5.1

Seasonwise Incremental Labour Utilisation

BORD

IrrScheme		Wge/dayM	Wge/dayF		Male Labour Absorption Main	Trad	SubI	SubII	Female Labour Absorption Main	Trad	SubI	SubII	NetM	NetF	NLabCstM	NLabCstF	TLab	TLabCst
NB	avg	0	0	sum	0				0				0	0	0	0	0	0
				avg	0				0				0	0	0	0		
RLI	avg	6.50	4.86	sum	390				65				390	65	7800	885	455	7965
				avg	27.86				4.64				27.86	4.64	585.71	63.21	16.25	255.18
STW(d)	avg	6.35	4.70	sum	545				115				545	115	9850	1547	660	11397
				avg	27.25				5.75				27.25	5.75	492.50	77.35	16.50	249.13
STW(e)	avg	19.20	14.30	sum	820				165				820	165	15630	2323	985	17953
				avg	82.00				16.50				82.00	16.50	1563.00	232.30	49.25	799.75
DTW(e)	avg	13	9.38	sum	445				104				445	104	7725	1307	549	9032
				avg	55.63				13.00				55.63	13.00	965.63	163.38	34.31	489.31
STW+DTW(e)	avg	16.44	12.11	sum	1265				269				1265	269	23355	3630	1534	26985
				avg	70.28				14.94				70.28	14.94	1297.50	201.67	42.61	656.22
ALLSCHEME	Avg	6.95	5.14	Sum	2200				449				2200	449	40285	6062	2649	46347
				Avg	29.73				6.07				29.73	6.07	544.39	81.92	17.98	275.23

PREKHARIF

IrrScheme		Wge/dayM	Wge/dayF		Male Labour Absorption Main	Trad	SubI	SubII	Female Labour Absorption Main	Trad	SubI	SubII	NetM	NetF	NLabCstM	NLabCstF	TLab	TLabCst
NB	avg	8.45	6.05	sum	95	-89	-66	-451	12	101	-66	-42	-511	5	-6600	100	-506	-6492
				avg	4.32	-4.05	-3.00	-20.50	0.55	4.59	-3.00	-1.91	-23.23	0.23	-300.00	4.91	-11.50	-149.89
RLI	avg	10.57	4.64	sum	405	-131	-60	-345	31	12	-12	-13	-131	18	-1659	179	-113	-1498
				avg	28.93	-9.36	-4.29	-24.64	2.21	0.86	-0.86	-0.93	-9.36	1.29	-118.50	12.79	-4.04	-58.61
STW(d)	avg	12.90	6.05	sum	720	-445	260	-384	67	-16	42	7	151	100	1961	935	251	2896
				avg	36.00	-22.25	13.00	-19.20	3.35	-0.80	2.10	0.35	7.55	5.00	98.05	46.75	6.28	51.53
STW(e)	avg	11.10	6.10	sum	195	-210	65	-420	0	11	30	-21	-370	20	-5235	207	-350	-5029
				avg	19.50	-21.00	6.50	-42.00	0.00	1.10	3.00	-2.10	-37.00	2.00	-523.50	20.70	-17.50	-268.75
DTW(e)	avg	13.50	6.00	sum	230	-150	75	-135	21	0	33	0	20	54	265	498	74	763
				avg	28.75	-18.75	9.38	-16.88	2.63	0.00	4.13	0.00	2.50	6.75	33.13	62.25	4.63	19.94
STW+DTW(e)	avg	12.17	6.06	sum	425	-360	140	-555	21	11	63	-21	-350	74	-4970	705	-276	-4265
				avg	23.61	-20.00	7.78	-30.83	1.17	0.61	3.50	-1.17	-19.44	4.11	-276.11	39.17	-7.67	-136.88
ALLSCHEME	Avg	10.96	5.78	sum	1645	-1025	274	-1680	131	108	27	-57	-786	209	-10498	2059	-577	-8439
				avg	22.53	-14.04	3.75	-23.01	1.79	1.48	0.37	-0.78	-10.77	2.86	-143.81	28.21	-3.95	-70.47

Table 5.1

Seasonwise Incremental Labour Utilisation

BORO

IrrScheme		Wge/dayM	Wge/dayF		Male Labour Absorption Main	Trad	SubI	SubII	Female Labour Absorption Main	Trad	SubI	SubII	NetM	NetF	(per acre) NLabCstM	NLabCstF	TLab	TLabCst
NB	avg	0	0	sum	0				0				0	0	0	0	0	0
				avg	0				0				0	0	0	0		
RLI	avg	6.50	4.86	sum	390				65				390	65	7800	885	455	7965
				avg	27.86				4.64				27.86	4.64	585.71	63.21	16.25	255.18
STW(d)	avg	6.35	4.70	sum	545				115				545	115	9850	1547	660	11397
				avg	27.25				5.75				27.25	5.75	492.50	77.35	16.50	249.13
STW(e)	avg	19.20	14.30	sum	820				165				820	165	15630	2323	985	17953
				avg	82.00				16.50				82.00	16.50	1563.00	232.30	49.25	789.75
DTW(e)	avg	13	9.38	sum	445				104				445	104	7725	1307	549	9032
				avg	55.63				13.00				55.63	13.00	965.63	163.38	34.31	489.31
STW+DTW(e)	avg	16.44	12.11	sum	1265				269				1265	269	23355	3630	1534	26985
				avg	70.28				14.94				70.28	14.94	1297.50	201.67	42.61	656.22
ALLSCHEME	Avg	6.95	5.14	Sum	2200				449				2200	449	40285	6062	2649	46347
				Avg	29.73				6.07				29.73	6.07	544.39	81.92	17.90	275.23

PREKHARIF

IrrScheme		Wge/dayM	Wge/dayF		Male Labour Absorption Main	Trad	SubI	SubII	Female Labour Absorption Main	Trad	SubI	SubII	NetM	NetF	NLabCstM	NLabCstF	TLab	TLabCst
NB	avg	8.45	6.05	sum	95	-89	-66	-451	12	101	-66	-42	-511	5	-6600	108	-506	-6492
				avg	4.32	-4.05	-3.00	-20.50	0.55	4.59	-3.00	-1.91	-23.23	0.23	-300.00	4.91	-11.50	-149.89
RLI	avg	10.57	4.64	sum	405	-131	-60	-345	31	12	-12	-13	-131	18	-1659	179	-113	-1403
				avg	28.93	-9.36	-4.29	-24.64	2.21	0.86	-0.86	-0.93	-9.36	1.29	-118.50	12.79	-4.04	-58.61
STW(d)	avg	12.90	6.05	sum	720	-445	260	-384	67	-16	42	7	151	100	1961	935	251	2896
				avg	36.00	-22.25	13.00	-19.20	3.35	-0.80	2.10	0.35	7.55	5.00	98.05	46.75	6.28	51.53
STW(e)	avg	11.10	6.10	sum	195	-210	65	-420	0	11	30	-21	-370	20	-5235	207	-350	-5828
				avg	19.50	-21.00	6.50	-42.00	0.00	1.10	3.00	-2.10	-37.00	2.00	-523.50	20.70	-17.50	-260.75
DTW(e)	avg	13.50	6.00	sum	230	-150	75	-135	21	0	33	0	20	54	265	498	74	763
				avg	28.75	-18.75	9.38	-16.88	2.63	0.00	4.13	0.00	2.50	6.75	33.13	62.25	4.63	19.94
STW+DTW(e)	avg	12.17	6.06	sum	425	-360	140	-555	21	11	63	-21	-350	74	-4970	705	-276	-4265
				avg	23.61	-20.00	7.78	-30.83	1.17	0.61	3.50	-1.17	-19.44	4.11	-276.11	39.17	-7.67	-136.00
ALLSCHEME	Avg	10.96	5.78	sum	1645	-1025	274	-1680	131	108	27	-57	-786	289	-10498	2059	-577	-8439
				avg	22.53	-14.04	3.75	-23.01	1.79	1.48	0.37	-0.78	-10.77	2.86	-143.81	28.21	-3.95	-70.47

KHARIF

IrrScheme		Wge/dayM	Wge/dayF		Male Labour Absorption Main	Trad	SubI	SubII	Female Labour Absorption Main	Trad	SubI	SubII	NetM	NetF	NLabCstM	NLabCstF	TLab	TLab
NB	avg	14.77	10.95	sum	50	-8	-65		12	149	15		-23	176	-369	2488	153	2
				avg	2.27	-0.36	-2.95		0.55	6.77	0.68		-1.05	8.00	-16.77	112.73	3.48	-4.
RLI	avg	14.93	7.86	sum	555	-390	85		109	8	55		250	172	4805	2357	422	7
				avg	39.64	-27.86	6.07		7.79	0.57	3.93		17.86	12.29	343.21	168.36	15.07	177.
STW(d)	avg	17.75	11.70	sum	860	-452	181		172	-23	96		589	245	11443	3595	834	15
				avg	43.00	-22.60	9.05		8.60	-1.15	4.80		29.45	12.25	572.15	179.75	20.85	292
STW(e)	avg	16.20	13.50	sum	340	-485	16		107	-30	39		-49	116	-1060	1703	67	
				avg	34.00	-48.50	1.60		10.70	-3.00	3.90		-4.90	11.60	-106.00	170.30	3.35	-47.
DTW(e)	avg	17.13	12.75	sum	267	-298	0		99	-15	0		-15	84	-300	1239	69	
				avg	33.38	-36.25	0.00		12.38	-1.88	0.00		-1.88	10.50	-37.50	154.88	4.31	-13.
STW+DTW(e)	avg	16.61	13.17	sum	615	-695	16		206	-45	39		-64	200	-1360	2942	136	1
				avg	34.17	-38.61	0.89		11.44	-2.50	2.17		-3.56	11.11	-75.56	163.44	3.78	-32
ALLSCHEME	avg	16.05	11.11	Sum	2080	-1545	217		499	89	285		752	793	14519	11374	1545	23
				avg	28.11	-20.88	2.93		6.74	1.20	2.77		10.16	10.72	196.20	153.70	10.44	18

RABI

IrrScheme		Wge/dayM	Wge/dayF		Male Labour Absorption Main	Trad	SubI	SubII	Female Labour Absorption Main	Trad	SubI	SubII	NetM	NetF	NLabCstM	NLabCstF	TLab	TLab
NB	avg	3.95	1.86	sum	370	-185	-15		69	-15	0		170	54	2420	552	224	2
				avg	16.82	-8.41	-0.68		3.14	-0.68	0.00		7.73	2.45	110.00	25.09	5.09	5
RLI	avg	15.00	8.14	sum	1535	-163	94		261	0	97		1466	358	21617	3695	1824	25
				avg	109.64	-11.64	6.71		18.64	0.00	6.93		104.71	25.57	1544.07	263.93	65.14	79
STW(d)	avg	14.65	9.60	sum	1960	-175	-255		250	0	145		1530	395	23870	4455	1925	21
				avg	98.00	-8.75	-12.75		12.50	0.00	7.25		76.50	19.75	1193.50	222.75	48.13	60
STW(e)	avg	13.60	8.50	sum	955	0	-55		123	0	45		900	168	13420	1780	1868	1
				avg	95.50	0.00	-5.50		12.30	0.00	4.50		90.00	16.80	1342.00	178.00	53.40	67
DTW(e)	avg	15.00	7.38	sum	895	0	110		156	0	12		1005	168	15105	1666	1173	1
				avg	111.88	0.00	13.75		19.50	0.00	1.50		125.63	21.00	1888.13	208.25	73.31	95
STW+DTW(e)	avg	14.22	8.00	sum	1850	0	55		279	0	57		1905	336	28525	3446	2241	3
				avg	102.78	0.00	3.06		15.50	0.00	3.17		105.83	18.67	1584.72	191.44	62.25	80
ALLSCHEME	avg	11.45	6.66	sum	5715	-523	-121		859	-15	299		5071	1143	75757	12148	6214	8
				avg	77.23	-7.07	-1.64		11.61	-0.20	4.04		68.53	15.45	1023.74	164.16	41.99	51

ANNUAL IrrScheme		Wge/dayM	Wge/dayF		Male Labour Absorption Main	Trad	SubI	SubII	Female Labour Absorption Main	Trad	SubI	SubII	NetM	NetF	NLabCstM	NLabCstF	TLab	TLabC
NB	avg	10.82	11.11	sum	515	-282	-146	-451	93	235	-51	-42	-364	235	-2401.60	3626.6	-129	1224.9
				avg	23.41	-12.82	-6.64	-20.50	4.23	10.68	-2.32	-1.91	-16.55	10.68	-109.16	164.85	-2.93	-49.
RLI	avg	15.81	11.42	sum	2885	-684	119	-345	466	20	140	-13	1975	613	31240.72	7060.765	2588	38301.
				avg	206.07	-48.86	8.50	-24.64	33.29	1.43	10.00	-0.93	141.07	43.79	2231.48	504.34	92.43	1137.
STW(d)	avg	16.23	11.50	sum	4085	-1072	186	-384	604	-39	283	7	2815	855	46104.71	10582.25	3670	56686.
				avg	204.25	-53.60	9.30	-19.20	30.20	-1.95	14.15	0.35	140.75	42.75	2305.24	529.11	91.75	1173.
STW(e)	avg	17.15	13.04	sum	2310	-615	26	-420	395	-19	114	-21	1301	469	22194.04	5970.818	1770	28164.
				avg	231.00	-61.50	2.60	-42.00	39.50	-1.90	11.40	-2.10	130.10	46.90	2219.40	597.08	88.50	1133.
DTW(e)	avg	15.71	11.69	sum	1845	-440	185	-135	380	-15	45	0	1455	410	22906.41	4753.939	1865	27660.
				avg	230.63	-55.00	23.13	-16.88	47.50	-1.88	5.63	0.00	181.88	51.25	2863.30	594.24	116.56	1457.
STW+DTW(e)	avg	16.51	12.44	sum	4155	-1055	211	-535	775	-34	159	-21	2756	879	45100.46	10724.75	3635	55825.
				avg	230.83	-58.61	11.72	-30.83	43.06	-1.89	8.83	-1.17	153.11	48.83	2505.58	595.82	100.97	1277.
ALLSCHEME	avg	14.61	11.59	sum	11640	-3093	370	-1735	1938	182	531	-69	7182	2582	120044	31994	9764	152039
				avg	157.30	-41.80	5.00	-23.45	26.19	2.46	7.18	-0.93	97.05	34.89	1622.22	432.36	65.97	828.

Source : Sample Survey

An assessment of labour cost is also made in the table by weighting the incremental man-days figures by the computed annual average wage-rate for males and females, respectively. It may be explained here that daily wage-rate tends to vary between seasons and between schemes, as a result of the extent of periodic labour demand vis-a-vis supply. Thus schemes that extend cultivation into the period of normal slack in the labour market are able to do so with relatively smaller wage-involvement for the duration of such cultivation,. The Allscheme average wage-rate is computed by similarly weighting respondent wage-data by season and by scheme-category.

However, computation of labour costs should properly exclude such respondents for whom labour-impact has been nil or negative, since the reduction in wage involvement for them is notional rather than actual. Such an adjusted labour cost has been computed for combined males and female labour under the heading 'TLabCst'. These figures provide an unbiased yardstick for comparison between schemes.

In the irrigated sector a dichotomous tendency is generally noticed between incremental utilisation of male versus female labour. Although positive labour-impact is found for 'Main' and 'SubI' crop-categories and negative labour-impact for 'Trad' and 'SubII', the proportional extent of negative labour-impact is greater for male labour than for female labour. This is, as will be presently seen, the result of a large-scale shift of male labour to the 'Main' crop, and a tendency to maintain some of the 'Trad' crop by utilisation of female labour, rather than going for drastic cut-backs in such acreage. Schematic comparison shows highest labour-impact on DTW(e), followed by RLI(d) and STW(d), very close to each other, and STW(e) at the lower end. However, higher average wage-rates in the case of STW(e)

bring up its labour costs to closer proximity with RLI(d), and raises labour costs for STW(d) beyond that of RLI(d).

A study of differential labour-impact between males and females reveals relatively higher female labour absorption for STW(e), in contrast to male labour absorption, which is lower than that of diesel schemes. DTW(e) however shows highest labour creation for both categories.

As against this, labour absorption patterns for non-beneficiaries are radically different. Positive labour-impact for males only occurs in the 'Main' crop with high cut-backs in 'Trad', 'SubI' and 'SubII'. For females, however, positive absorption occurs in the 'Main' and 'Trad' crops with the labour-impact for the 'Trad' crop being so significantly high as to almost counter-balance the (negative) male labour-impact for this crop. The overall tendency for partial substitution of male by female labour is thus even more marked for the non-beneficiary category.

Table 5.2

Seasonwise Incremental Labour Utilisation

BORO — Male Labour Absorption / Female Labour Absorption / (in percentage terms)

IrrScheme	Main	Trad	SubI	SubII	Main	Trad	SubI	SubII	NetM	NetF	NLabCstM	NLabCstF	TLab	TLabCst
NB	0.00				0.00				0.00	0.00	0.00	0.00	0.00	0.00
RLI	3.35				3.35				5.43	2.52	5.90	2.77	4.66	5.24
STW(d)	4.68				5.93				7.59	4.45	8.21	4.84	6.76	7.50
STW(e)	7.04				8.51				11.42	6.39	13.02	7.26	10.09	11.81
DTW(e)	3.82				5.37				6.20	4.03	6.44	4.09	5.62	5.94
STW+DTW(e)	10.87				13.88				17.61	10.42	19.46	11.35	15.71	17.75
ALLSCHEME	18.90				23.17				30.63	17.39	33.56	18.95	27.13	30.48

PREKHARIF — Male Labour Absorption / Female Labour Absorption

IrrScheme	Main	Trad	SubI	SubII	Main	Trad	SubI	SubII	NetM	NetF	NLabCstM	NLabCstF	TLab	TLabCst
NB	0.82	2.88	-17.84	25.99	0.62	55.49	-12.43	66.87	-7.12	0.19	-5.50	0.34	-5.18	-4.27
RLI	3.48	4.24	-16.22	19.88	1.60	6.59	-2.26	18.84	-1.82	0.70	-1.38	0.56	-1.16	-0.97
STW(d)	6.19	14.39	70.27	22.13	3.46	-8.79	7.91	-10.14	2.10	3.87	1.63	2.92	2.57	1.90
STW(e)	1.68	6.79	17.57	24.21	0.00	6.04	5.65	30.43	-5.15	0.77	-4.36	0.65	-3.58	-3.31
DTW(e)	1.98	4.85	20.27	7.78	1.08	0.00	6.21	0.00	0.28	2.09	0.22	1.56	0.76	0.50
STW+DTW(e)	3.65	11.64	37.84	31.99	1.08	6.04	11.86	30.43	-4.87	2.87	-4.14	2.20	-2.83	-2.81
ALLSCHEME	14.13	33.14	74.05	96.83	6.76	59.34	5.08	82.61	-10.94	8.09	-8.75	6.44	-5.91	-5.55

KHARIF — Male Labour Absorption / Female Labour Absorption

IrrScheme	Main	Trad	SubI	SubII	Main	Trad	SubI	SubII	NetM	NetF	NLabCstM	NLabCstF	TLab	TLabCst
NB	0.43	0.26	-17.57		0.62	81.87	2.82		-0.32	6.82	-0.31	7.75	1.57	1.39
RLI	4.77	12.61	22.97		5.62	4.40	10.36		3.48	6.66	4.00	7.37	4.32	4.71
STW(d)	7.39	14.61	48.92		8.88	-12.64	18.00		8.20	9.49	9.53	11.24	8.54	9.89
STW(e)	2.92	13.09	4.32		5.52	-16.48	7.34		-0.68	4.49	-0.88	5.32	0.69	0.42
DTW(e)	2.20	9.38	0.00		5.11	-8.24	0.00		-0.21	3.25	-0.25	3.87	0.71	0.62
STW+DTW(e)	5.28	22.47	4.32		10.63	-24.73	7.34		-0.89	7.75	-1.13	9.20	1.39	1.04
ALLSCHEME	17.87	49.95	58.65		25.75	48.90	38.61		10.47	30.71	12.09	35.55	15.82	17.83

RABI	Male Labour Absorption				Female Labour Absorption									
IrrScheme	Main	Trad	SubI	SubII	Main	Trad	SubI	SubII	NetM	NetF	NLabCstM	NLabCstF	TLab	TLabCst
NB	3.18	5.98	-4.05		3.56	-8.24	0.00		2.37	2.09	2.02	1.73	2.29	1.95
RLI	13.19	5.27	25.41		13.47	0.00	18.27		20.41	13.87	18.01	11.55	18.68	16.65
STW(d)	16.84	5.66	-68.92		12.90	0.00	27.31		21.30	15.30	19.88	13.92	19.72	18.63
STW(e)	8.20	0.00	-14.86		6.35	0.00	8.47		12.53	6.51	11.18	5.56	10.94	10.00
DTW(e)	7.69	0.00	29.73		8.05	0.00	2.26		13.99	6.51	12.58	5.21	12.01	11.03
STW+DTW(e)	15.89	0.00	14.86		14.40	0.00	10.73		26.52	13.01	23.76	10.77	22.95	21.03
ALLSCHEME	49.10	16.91	-32.70		44.32	-8.24	56.31		70.61	44.27	63.11	37.97	63.64	57.82

ANNUAL	Male Labour Absorption				Female Labour Absorption									
IrrScheme	Main	Trad	SubI	SubII	Main	Trad	SubI	SubII	NetM	NetF	NLabCstM	NLabCstF	TLab	TLabCst
NB	4.42	9.12	-39.46	25.99	4.80	129.12	-9.60	60.87	-5.07	9.10	-2.00	11.34	-1.32	0.81
RLI	24.79	22.11	32.16	19.88	24.05	10.99	26.37	18.84	27.50	23.74	26.02	22.07	26.51	25.19
STW(d)	35.09	34.66	50.27	22.13	31.17	-21.43	53.30	-10.14	39.20	33.11	38.41	33.08	37.59	37.28
STW(e)	19.85	19.88	7.03	24.21	20.38	-10.44	21.47	30.43	18.11	18.16	18.49	18.66	18.13	18.52
DTW(e)	15.85	14.23	50.00	7.78	19.61	-8.24	8.47	0.00	20.26	15.88	19.08	14.86	19.10	18.19
STW+DTW(e)	35.70	34.11	57.03	31.99	39.99	-18.68	29.94	30.43	38.37	34.04	37.57	33.52	37.23	36.72
ALLSCHEME	100.00	100.00	100.00	100.00	100.00	100.00	100.00	100.00	100.00	100.00	100.00	100.00	100.00	100.00

Source : Sample Survey

The data for labour-impact aggregates in Table 5.1 are presented in percentage form in Table 5.2. Percentage data facilitate easy comparison between schemes, while revealing which proportion of the total annual impact (i.e. Allscheme impact) is accounted for by each scheme-category, although some distortion has inescapably crept in on account of unequal number of respondents in each scheme for reasons relating to drawing of the sample, as mentioned earlier.

5.2 Inter-Seasonal Variations

The labour-shifts observed in the annual figures in the previous tables demand further scrutiny. This is because the the seasonal character in such shifts is largely concealed in case of annual data. Thus closer identification of labour shifts inevitably leads to consideration of incremental labour-utilisation by cropping season.

Table 5.3 presents inter-seasonal variations in labour creation in the form of a decomposition of the aggregate annual per acre figures of Table 5.1 into seasonal aggregates, over all schemes, for the boro, pre-kharif, kharif and rabi seasons. Labour-impact is indicated separately in both man-day and cost terms for male & female labour. Non-bracketed figures relate to seasonal aggregates, with seasonal averages being bracketed below. The table also provides a percentage inter-seasonal break-up of the labour-impacts and labour costs in relation to the annual average.

Differences in the labour-creation between males and females are immediately obvious. Whereas the bulk of additional man-days created for male labour fall in two crop seasons, namely, rabi and boro, with the positive labour increment of the kharif season almost concealing the negative increment of the pre-kharif season, the additional man-days created for female labour are more widely dispersed and positive for the different seasons. Analytically combining the two observed

patterns, the directions of labour-substitution become apparent.

Enhanced labour-demand during rabi and boro seasons is explained by the fact that these seasons cover the dry months, to which cultivation has now been extended with the availability of irrigation. Boro, in fact, is entirely a post-irrigation introduction. Although incremental female involvement is fairly high during these seasons, in percentage terms it is proportionately smaller than in the case of males. In the kharif season a much higher proportion incremental man-days is created for female labour relative to male labour, indicating partial substitution of male labour demand by female labour demand. The reason is high prevailing wage-rates during the kharif season, when labour demand, including non-beneficiaries, reaches its annual peak. It should be remembered here that kharif cultivation is primarily rain-fed and thus least susceptible to irrigation-induced impacts. Thus available male labourers already being fully-absorbed, or nearly so, additional man-days during these seasons are filled to a high extent by females. Labour-impact percentages during the pre-kharif season present special feature. In this case, female labour-impact is opposite in direction to male labour-impact. It will be remembered, from analysis in the previous chapter that the large-scale preferences of STW(e) and DTW(e) for boro cultivation, there has been a corresponding wide spread cut-back in their pre-kharif acreage. In the case of STW(d), too, a partial shift has been remarked upon. In labour-impact terms replacement of the negative male labour increment by the positive female labour increment partially helps to maintain pre-kharif acreage to some extent, while also permitting shift of male labour to boro cultivation.

In labour cost terms, similar inter-seasonal patterns are observed for both male and female labour. However, comparison of labour cost percentages with labour utilisation percentages gives deeper insight into the phenomenon of inter-seasonal wage-competitiveness. Proceeding by season, it can thus be observed that percentage incremental labour cost are generally smaller than percentage incremental labour utilisation over rabi, boro and pre-kharif seasons, when slack prevails in the labour market because of low intensity dry-month cultivation with, consequently, depressed wage-rates. Conversely, in the case of high intensity kharif cultivation, percentage incremental labour costs exceed percentage incremental labour utilisation, because of the relatively saturated labour market situation, in which circumstance there is also a tendency for substitution of more expensive male labour by relatively cheaper female labour. Furthermore, keeping in mind the temporal overlap between boro and pre-kharif seasons, declining male involvement in pre-kharif cultivation is further encouraged by enhanced boro demand for male labour at the new higher boro wage-rate and, once more a tendency to substitute relatively cheaper female labour for male labour resurfaces. However, since the functions of male labour are not entirely duplicated by female labour, such substitution is not absolute.

The foregoing analysis of inter-seasonal labour shifts has been pursued independently of scheme characteristics and has revealed general aspects of inter-seasonal variation. However, since this study is more concerned with the evaluation of differential impact on the agricultural situation by scheme category, a more detailed analysis is called for. This is now undertaken with reference to the composite inter-seasonal table relating to incremental labour utilisation i.e. Table 5.4.

Table 5.3

Inter-Seasonal Variations in Labour Creation

	Maler Labour	Female Labour	Labour CostM	Labour CostF	Total Labour(M+F)	TotalLabour Cost(M+F)
BORO	2200	449	40285	6062	2649	46347
	(30.63)	(17.38)	(33.55)	(18.94)	(27.13)	(30.48)
PRE-KHARIF	-786	209	-10498	2059	-577	-8439
	(-10.94)	(8.09)	(-8.74)	(6.43)	(-5.90)	(-5.55)
KHARIF	752	793	14519	11374	1545	25893
	(10.47)	(30.71)	(12.09)	(35.54)	(15.82)	(17.03)
RABI	5071	1143	75757	12148	6214	87905
	(70.60)	(44.26)	(63.10)	(37.96)	(63.64)	(57.81)
AnnSum	7182	2582	120044	31994	9764	152038.6752
	(100.00)	(100.00)	(100.00)	(100.00)	(100.00)	(100.00)

Source : Sample Survey

Table 5.4

Incremental Labour Utilisation by Scheme

IrrScheme	LabM	LabF	LabCostM	LabCostF	TotalLab	TotalLabCost
NB	-364	235	-2401.60	3626.6	-129	1224.997
	(-5.07)	(9.10)	(-2.00)	(11.34)	(-1.32)	(0.81)
RLI	1975	613	31240.72077	7060.765	2588	38301.48
	(27.50)	(23.74)	(26.02)	(22.07)	(26.51)	(25.19)
STW(d)	2815	855	46104.71823	10582.25	3670	56686.97
	(39.20)	(33.11)	(38.41)	(33.08)	(37.59)	(37.28)
STW(e)	1301	469	22194.04415	5970.818	1770	28164.86
	(18.11)	(18.16)	(18.49)	(18.66)	(8.13)	(18.52)
DTW(e)	1455	410	22906.41657	4753.939	1865	27660.35
	(20.26)	(15.88)	(19.08)	(14.86)	(19.10)	(18.19)
STW+DTW(e)	2756	879	45100.46073	10724.75	3635	55825.21
	(38.37)	(4.04)	(37.57)	(33.52)	(37.23)	(36.72)
ALLSCHEME	7182	2582	120044	31994	9764	152038.6
	(100.00)	(100.00)	(100.00)	(100.00)	(100.00)	(100.00)

Source : Sample Survey

Table 5.4 presents in both aggregate and relative percentage terms, the schemewise seasonal break-up of annual per acre incremental labour utilisation and annual per acre incremental labour costs. Additional information in the table covers average seasonal wage-rates for both males and females incorporating schemewise variation thereof. The table thus offers, at a glance, a comparative view of schemewise and inter-seasonal variations in all aspects of incremental labour utilisation.

Figures for average wage-rates have to be interpreted taking cognisance of the process of averaging whereby they are computed. Since the total wage-involvement has been averaged over the number of respondents in each scheme-category, average wage-rate figures for particular crop season may appear unreasonably low in the event that a large number of respondents within the scheme category happen to be non-participants in that particular season. In such a case it is always advisable to use the computed seasonal wage-rates for the scheme with the highest participation in the season as representative of the wage-rates that actually prevail. Some distortion has crept in into the percentage figures because of unequal number of respondents in each scheme-category as a result of which diesel percentage figures appear inflated vis-a-vis percentage figures for the electrified schemes which have fewer participants. Thus in cases where the diesel schemes show higher percentage performances relative to electrified schemes, the actual differentials between them will not be as wide as suggested by the figures. Conversely, where percentage performances of electrified schemes predominate over those of diesel schemes, actual differentials would be wider than suggested by the figures.

Proceeding by season, it is seen that incremental labour utilisation of both male and female in rabi cultivation is highest among all schemes for STW(d) followed fairly closely by RLI(d). Electrified schemes show lower labour increments, although DTW(e) draws proportionately more of the males and conversely, for females, for STW(e). In the boro season highest incremental absorption of both male and female labour is displayed by STW(e) followed by STW(d), DTW(e) and RLI(d). Percentage figures, which are scheme-percentages on the aggregate annual increment, reveal these patterns more explicitly for both these seasons.

Schemewise incremental labour utilisation patterns for the kharif season are much more complex. It is noticed that a cut-back in male labour absorption is displayed by both the electrified schemes, namely, STW(e) and DTW(e), although positive increments in female labour utilisation suggest competitive substitution of one category of labour by the other, to an extent that the cut-back in male labour is more than compensated by the enhanced utilisation of female labour. The pattern for the diesel schemes is however different with positive labour-impacts for both male and females. STW(d) remains, by far, the highest creator of labour absorption during kharif season. Complexity, although of a different type, also prevails in the pre-kharif season, where male labour increments are negative for STW(e) and RLI(d) and positive for STW(d) and DTW(e), although only marginal for the latter. Female labour absorption, although positive for all schemes, is much higher for STW(d) and DTW(e) than for STW(e) and RLI(d).

Analytical reasons for the kharif patterns are fairly straightforward. Prior analysis of schemewise cropping has revealed greater retention of indigenous acreage by the diesel schemes, compared to the electrified schemes which are more prone to switching over to HYV in

large measure. Since per acre labour requirements for the so-called 'Main' crop are lower than those for 'Trad' crops, incremental male labour utilisation during kharif are negative for STW(e) and DTW(e) and still positive for STW(d) and RLI(d). Pre-kharif patterns are largely attributable to temporal coincidence of this season with boro cultivation, at least as far as the electrified schemes are concerned, with their large participation in boro cropping. In the case of RLI(d), the pre-kharif pattern is the product of both switch over from 'Trad' to 'Main' and of a cut-back in subsidiary cropping. The non-beneficiary group is a non-participant in boro cultivation, which accounts for the zero figures therein in the table. The highest positive labour increment for this category has been during the rabi season, and the highest cut-back, as far as male labour is concerned, during pre-kharif. The negative labour-impact for males during kharif is due to partial switch over to HYV, though labour substitution of males by females does permit retention of indigenous acreage.

In sum, therefore, the results by analysis of incremental labour utilisation shows significant creation of labour capacities during rabi and boro seasons, both of which are non-traditional cultivation seasons largely supported by irrigation, as far as the study region is concerned. The more intrinsically interesting phenomena of labour shifts and the labour substitution attendant upon them is also revealed by inter-seasonal analysis. Although the irrigated sector as a whole accounts for most of additional labour creation, wide-ranging differentials exist between schemes because of the chosen cropping emphasis. The diesel schemes are generally more non-labour intensive than the electrified schemes, although some scheme-related variations between absorption patterns for males versus females are shown to exist. STW(e) is a case in point, and discounting percentage figure for the distortion introduced by unequal number of respondents per scheme-category would only enhanced its position on this score.

LAND

5.3 The Impact on Land

Because the analysis so far covered focuses on inter-scheme performance variation, some interest may thereby have arisen on the question of whether there are any intrinsic determinants that govern options regarding choice of scheme. *A priori*, it might be assumed that scheme-choice by optees is conditioned by their general economic circumstances, including their relative position on the agricultural-landholding scale. Specifically, it may appear reasonable to believe, for example, that cultivators in the non-beneficiary category might comprise only poor and marginal farmers, or that the STW schemes (both diesel & electric), which involve a higher level of private capitalisation-costs, would only be opted for the farmers of more solvent economic status. Since land assets held or rented provide some indication of the economic status of sample respondents, an analysis of these indicators is now made with the limited and pointed objective of distinguishing, if possible, between the classes of respondents in each scheme-category on the basis of their (land) asset-holding patterns.

Table 5.5

Schemewise Landholding & Land Transfer Pattaren

	NB	RLI(d)	STW(d)	DTW(e)	STW(e)	STW(e)+DTW(e)	TOTAL
	avg	avg	avg	avg	avg	avg	avg
TotalLand	4.42	5.65	5.98	6.45	6.50	6.48	5.57
TotalIrrigatedLand	0.03	3.81	3.99	4.02	4.52	4.32	2.85
TotalNon-IrrigatedLand	4.15	1.99	2.13	2.43	1.97	2.16	2.71
Lease-inIrrigatedLand	0.00	0.33	0.41	0.29	0.59	0.47	0.29
Lease-inNon-IrrigatedLand	0.05	0.00	0.00	0.00	0.00	0.00	0.01
Lease-outIrrigatedLand	0.03	0.00	0.00	0.00	0.00	0.00	0.01
LeaseOutNon-IrrigatedLand	0.34	0.10	0.14	0.36	0.17	0.24	0.22
NetLand	4.52	5.57	5.85	6.52	6.07	6.26	5.49
NetIrrigatedLand	0.06	3.48	3.58	3.74	3.93	3.85	2.58
NetNon-IrrigatedLand	4.45	2.09	2.27	2.79	2.14	2.41	2.92
LandTransfer	0.09	-0.09	-0.13	0.07	-0.43	-0.22	-0.08
AnnualIncreasentAcerageSown	-0.82	3.34	2.91	4.05	3.55	3.76	2.08
Post-Irr.SownAcreBoro	0.00	0.73	0.90	1.94	2.96	2.54	0.98
Post-Irr.SownAcrePre-Kharif	1.41	2.03	1.90	1.58	1.04	1.26	1.63
Post-Irr.SownAcreKharif	3.75	5.32	5.42	5.76	5.89	5.84	5.00
Post-Irr.SownAcreRabi	0.24	2.41	2.38	2.51	2.16	2.31	1.73
AnnualAcreagePost-Irrigation	5.40	10.48	10.60	11.79	12.06	11.95	9.34
Pre-Irr.SownAcreB	0.00	0.00	0.00	0.00	0.00	0.00	0.00
Pre-Irr.SownAcrePre-kharif	1.57	1.69	1.76	1.75	2.74	2.33	1.82
Pre-Irr.SownAcreKharif	4.47	4.80	5.07	5.28	4.95	5.09	4.85
Pre-Irr.SownAcreRabi	0.18	0.64	0.87	0.70	0.81	0.77	0.60
AnnualAcreagePre-Irrigation	6.22	7.14	7.70	7.73	8.51	8.19	7.26

Table 5.5 above, presents information on land-holdings, leasings (-in & -out) and resultant land transfers of irrigated, non-irrigated and total holdings of land in average terms, for all respondent categories, and for the entire sample. It can be seen from the table that very clear differences in land-holding patterns distinguish respondents in the diesel scheme from those in the electrified schemes, with a minimum separation of nearly half an acre in total-holding terms, e.g. between STW(d) & DTW(e) in the table. However, somewhat conversely to a priori expectations, total land-holdings in the NB category are not too far removed from the diesel schemes vis-a-vis those from the electrified schemes under STW(e) schemes. Manifestation of this can be seen if the above distribution of each category are considered in ratio terms. Whereas these ratios (i.e. irrigated:non-irrigated land) evaluate as 1.91 & 1.87 for RLI(d) & STW(d), respectively, which are relatively close, a very wide gap separates them from STW(e) for which the ratio is as high as 2.29. DTW(e) however does not fall into the pattern, registering a ratio of 1.61, which is the lowest in the irrigated scheme categories. No logical explanation can, however, be attributed for this, beyond noting that the relatively inflexible feeder-network of the DTW(e) schemes could conceivably be responsible in rendering their more distant holdings inaccessible to irrigation water. For the NB category the ratio is dismally low at 0.07, for obvious reasons. Whatever little irrigation is available to them is rudimentary and comprises dugwells & handpumps, usually domestic.

Very interesting insights can be gleaned from the data on leasings in the table. It can be seen that all schemes in the irrigated sector lease-in irrigated land. The conceptual implication is not, of course, that the land leased in was irrigated to start off with, but that land of non-irrigated nature is leased-in by them to utilize fully any spare or idle pumping capacity that persists after the irrigation needs of self-owned land have been taken care of. The logic behind this draws its substance from observation that no respondent is a lessor-out of irrigated land, whereas all of them, to smaller or longer degree, do lease-out non-irrigated land. Keeping in mind the earlier observations on flexibility of the smaller STW irrigation schemes relative to the larger schemes, the reasons behind the observed patterns becomes evident. In the case of STW(d) & STW(e) the freedom to move the location of the same pumpset to different borings on their land obviously leads to their much higher inward leasing of irrigated land. In the case of STW(e), this is even higher than for STW(d), which seems to bolster the earlier conclusion during PC-analysis that STW(e) makes the most intensive use of land resources.

For the larger schemes leasings-in are relatively lower in both scheme categories but a differential pattern again emerges, as far as leasings-out of non-irrigated land are concerned, in the case of DTW(e); for this particular scheme-category leasings-out are substantially higher and even exceed leasings-out by the NB category, which may seem paradoxical considering that the scheme also leases-in a substantial amount of land. Once again the inflexibility of the scheme comes into the picture as an explaining-factor. The fact that the same limitations do not seem to effect RLI(d), the other large scheme, may seem to be a little contradictory. Moreover scheme differences between RLI(d) & DTW(e) are technical in origin, and thus resolution of the contradiction is postponed till the next section of this chapter which deals with the more abstruse technical aspects of scheme classification. Besides technical considerations, the peculiarities in leasing behaviour of DTW(e) scheme-holders would imply that their leasings-in consist of the leased-out lands of other cultivators that happen to be contiguous to their spouts whereas they prefer to lease-out outlying lands to those scheme-holders who can make better use for them. This explanation adds consistency to the earlier comment regarding the ratio of irrigated to non-irrigated land applicable to DTW(e). For the NB category the leasing pattern is as expected with high leasings-out of non-irrigated land.

Other rows in the table pertain to land personally held by the cultivator i.e. holdings net of leasings-in but including leasings-out. Patterns here more or less echo the earlier observation on the total land-holding pattern. Average land-holdings in the electrified sector are substantially higher than those of the diesel sector. The non-beneficiaries have a net land-holding that again exceeds a priori expectations. Among all respondent categories DTW(e) has the highest net landholding and RLI(d) the lowest.

As leasings-in by the irrigated sector was seen to comprise irrigated land, much in excess of their leasings-out of non-irrigated land (except for DTW(e), which is somewhat of an exception) the net land holding figures show that the irrigated:non-irrigated ratios will be lower for all irrigated categories. Land-holding patterns also have a dynamic dimension, in the sense that lands presently leased (-in or -out) are eventually permanently transferred through outright purchase or sale. Such land acquisitions, over a dynamic time-frame, are substantially a result of agricultural performance which provides the

incentives behind them. Although sample data on land was acquired against a cross-sectional rather than dynamic time frame, an indication of the trends that may eventually lead to such acquisitions is provided by the row of figures against 'LandTransfers'. The figures there show that irrigated schemes, in general, exhibit inward transfers (except for DTW(e), which is subject of out-transfer of a magnitude similar to the out-transfer in the case of non-beneficiaries). Among the other irrigated schemes, smaller schemes show higher inward transfer, which in the case of STW(e), reaches an average level as high as 0.43 acres; this result is an indicator of, and substantiates, their better agricultural performance.

EFFICIENCY OF ENERGY-USE

5.4 Technical Factors in Scheme Efficiency

In an analysis of scheme-efficiency and performance of energised irrigation, some comment on energy-efficiencies is inescapable. While such comment has necessarily been kept to a minimum to avoid too wide a digression from the subject matter of the present thesis, all salient technical aspects that are found to have a bearing on the general findings of the study are presented in this section.

Insofar as irrigation schemes in the energised sector are concerned, they all serve the common purpose of providing supplementary water-source for agriculture in the general economic decision-making framework. However, in their technical aspects, wide differences in technology characterise each scheme, which have a bearing on the questions of energy efficiency. Since the full costs of energy used in irrigation do not always devolve upon the scheme-beneficiary, his investment behaviour may be technology-insensitive. However, an evaluation of the comparative aspects of irrigation schemes classified by energy source, such as is being attempted by this study, requires consideration of real rather than notional and physical rather than monetary costs, which then influence the ultimate recommendations of the study.

A primary technological divide between schemes is imposed by the nature of the pumpset configured into it. Whereas STW(d) and STW(e) use smaller capacity pumpsets of 5 HP rating, powered in the first case by diesel engines with a fuel consumption rating of one litre/hour, the latter use low-capacity electric motors with an electricity rating of 3 kwh. The larger schemes involve non-identically rated pumpsets of 17.5 HP (standard) for DTW(e) and 24.5 HP for RLI(d), although the new RLI(d) technology utilises a 20 HP* submersible pump, with a gravity-assisted channeling system that boosts energy-efficiency. Energy consumption for these schemes are 14 kwh, and 3 litres/hour, respectively. Water discharge achieved in STW(e) 100m^3/h for 5 HP pumps, 200m^3/h for 17.5 HP pumps, 200m^3/h for 24.5 HP pumps, and a higher 400m^3/h for the new technology 20 HP RLI(d) pumps. In the study region however, RLI(d) schemes covered utilise older technology and thus involve only 24.5 HP pumpsets.

Irrigation requirements per acre can be technically related to pump discharge capacities through recourse to an acre-inch transformation of water drawn and cropping-considerations; this is, in fact, the basis for fixation of scheduled water-rates by the West Bengal State Minor Irrigation Corporation Limited (WBSMIC)[1], in the case of RLI(d) & DTW(e) schemes. Similar transformations render the STW(d) & STW(e) water-drawings comparable. RLI(d) & DTW(e) schemes are

multiple-user schemes with large area-networks. In their case pumping efficiency decreases geometrically with distance from spout and can lead to great divergences between rated and working pumping capacities. These technical features have already been subsumed into the computation of energy costs, earlier used in the PC-analysis.

As far as the question of scheme-efficiency is concerned, the smaller schemes are intrinsically different from larger schemes. In the case of the former, the entire scheme operation and water-drawal thereof devolves on the beneficiary, who thus decides when to switch on/switch off the pumpset and how long to run it. For the larger schemes this function is performed by delegated staff of the WBSMIC or the other government organisations concerned. The procedure to be officially followed is bureaucratic: it involves prior deposit of water-drawal charges with the block authorities, and certification of such deposit before the pump-operator opens the spout. In practice however, less official procedures are resorted to whereby the beneficiary has a private working arrangement with the operator and is guaranteed supply of water according to necessity on deferred payment if need be. Thus greater laxity seems to affect the efficiency of operation of RLI(d) and DTW(e) schemes. A second, more interesting feature is also observed in these schemes. Since diesel supply for powering the RLI(d) pumpset involves transportation and stockpiling operations by the irrigation authority, often over long distances, supply bottlenecks can result in stalling of pumping operations. This encourages closer monitoring of wastages and economy in the use of relatively-expensive diesel oil on the part of the operator and the committees served. The same economy concerns cannot be said to prevail in the case of DTW(e) which uses a cheaper energy-source, with electric supply available on tap, so to speak. Although the principle of efficient drawal of water rests on coordination of irrigation demand by all scheme-beneficiaries, this principle is often sacrificed on the grounds of expediency when non-simultaneous release of water to individual beneficiaries multiplies water wastage. On an efficiency scale therefore, DTW(e) is subject to larger overdrawal and wastages than RLI(d).

The privately operated STW schemes (both diesel & electric) have a much higher efficiency level than the larger schemes for the reason earlier noted. STW(e) & STW(d) beneficiaries are more cost-conscious than the salaried pump-operators of the larger schemes, and since they have to directly bear the brunt of the energy cost of irrigation at largely unsubsidised rates, they exercise greater prudence in trying to optimise the use of irrigation water. This is especially true of STW(d) scheme-beneficiaries, who have much higher per acre energy costs of irrigation, as earlier mentioned. The PC-analysis had already shown the influence on their investment behaviour, of these higher energy costs insofar as they are affected utilisation of other agricultural inputs. Similar reasons also defines their position on the efficiency scale, relative to each other.

STW(d) beneficiaries have to cope with the problems of securing and transporting (at their own cost), diesel oil to their pumpsets, as well as uncertainties in its supply. STW(e) beneficiaries are free from this onus. Another intrinsic differentiating feature between these scheme-categories is the system-difference that obtains - the diesel operator has to make a prior cash investment on his fuel requirements and thus finds incentive enough to make rational use of it. STW(e) operators are liable for costs of electricity drawn on the basis of two parallel remittance systems designed by he State

Electricity Board. The case of unmetered connections (which was overwhelmingly the case in the sample study), charges are levied at a computed average seasonal rate that adds up to a total liability of Rs.970 annually (now revised to Rs.1380 per annum). Holders of metered connections are billed at metered rates, on a quarterly basis.

It can thus be seen that STW(e) scheme-holders derive the dual benefit of paying electricity charges at the partly-subsidised rates that prevail in the country, and having the facility of deferred payment, which is tantamount to interest-free short-term credit. Between the two schemes, stronger entrepreneurial incentives exist for STW(d) leading to an a priori expectation of greater efficiency from them. The hidden soft-loan character of STW(e) billing leads to entrepreneurship of another sort from them : they are able to commit a greater amount of investible resources to other agricultural inputs, on the strength of the 'hidden credit' advanced to them by the State Electricity Board through the deferred payment system.

Table 5.6

Schemewise Technical Performance Characteristics for Irrigation Systems under Field Conditions

(Per Capita figure)

Irr.Scheme.	NB	RLI(d)	STW(d)	STW(e)	DTW(e)	ALL(d)	ALL(e)
Average Land Holding	4.42	5.65	6.02	6.50	6.27	8.67	6.40
Average Irrigated Holding	0.03	3.81	4.07	4.52	3.81	5.84	4.21
Average Irrigated Acerage	0.47	26.22	16.23	58.66	28.14	20.34	45.10
Working Efficiency							
Electricity Consumed	**	**	**	81.71	336.48	**	153.02
Diesel Consumed	**	37.12	38.81	**	**	37.91	**
Adjusted Rated Efficiency							
Electricity Consumed	**	**	**	30	10.31	**	**
Diesel Consumed	**	2.206	20	**	**	**	**
Efficiency Ratio	**	14.44	1.94	2.72	26.47	**	**

Source: WBMIC, Sample Survey

Analysis of sample data in the light of the foregoing energy considerations has been made and the results presented in the above table. Figures relative to average land-holding and average irrigated-holding are indicated as identifying characteristics of the respondent-groupings by scheme, therein, and do not otherwise serve any analytical purpose. The purpose is served by the figures on incremental acreage irrigated. These figures represent the annual picture, inclusive of all cropping seasons and thus take into account all inter-seasonal variations in cropping patterns between schemes that had been observed earlier. It must be noted these figures are

also weighted by the number of times each crop (by type) is irrigated, which explains the seeming divergence between them and figures on irrigated holdings. The small average acreage of 0.47 under the NB category is the result of manually-powered dugwell irrigation etc. and does not carry any significant energy implication. All figures in the table are in annual-average terms. Average per capita energy consumption (in litres for diesel schemes and kwh for electrified schemes) per unit incremental irrigated acre for each scheme-category, are then presented. A foretaste of the energy-efficient characteristics of smaller versus larger schemes is readily obtained by comparing the appropriate figures for DTW(e) versus STW(e), and RLI(d) versus STW(d). From this comparison it can be seen that in the case of the electric schemes DTW(e) is phenomenally more energy-inefficient than STW(e). While precisely the same thing can not be said to characterise the comparison between RLI(d) and STW(d), RLI(d) being, very marginally, more efficient, STW(d) performs very creditably in almost compensating for the severe operational handicaps imposed on it by its technical features i.e. its low-capacity high-consumption pumping system.

Further insight into the energy-efficiency characterising each scheme, and more particularly into the problem of wastages alluded to in the a priori comments, can be gained through a comparison of the working-efficiency (or operational-efficiency) of each pumping system, with its rated efficiency. In the latter, some technical adjustment has, however, to be made because of non-ideal field conditions, which is done by assuming that each pump operates at an arbitrary 75% of its ideal-rated capacity.

Wide divergences, as observed between the adjusted rated efficiencies and working efficiencies will, after derating, be accounted for mainly through losses connected with the delivery system rather than the pumping system itself. Evidence of the magnitude of such losses is provided by the efficiency ratios computed which are derived by dividing the working efficiency measure by the adjusted rated-efficiency measure. It is here that the full picture emerges. Ratios for the electrified sector are now fully amenable to comparison with the diesel sector. The difference between efficiencies of large & small schemes is abundantly clear. The efficiency ratio for the shallow tubewell schemes lies in the range 1.94 to 2.72, while the range in the case of the large schemes is much higher at 14.44 to 26.49. As expected, highest energy efficiency prevails in the case of STW(d) and highest inefficiency in the case of DTW(e), with STW(e) and RLI(d) occupying the intermediate position in this efficiency scale. Nevertheless, the shallow tubewell schemes constitute a distinct sub-group of the irrigated sector, on energy-efficiency concentrations.

It may be pertinent to explore the underlying reasons. RLI(d) and DTW(e), being networked schemes, have an extensive distribution system of delivery channels and individual spouts, under manual control. Because of unlined water channels a large amount of seepage loss takes place. Since the water delivered spans over much larger land areas, transpiration and evaporation losses also multiply. Rated capacities for the 17.5 HP and 20-24.5 HP pumps used by these schemes are nominal; the reality is that such capacities rapidly decline over the large operational network with attendant energy dissipation. STW(d) and STW(e) schemes are boring-oriented instead of network-oriented : it is often usual for the scheme-beneficiary concerns to have three or four borings, all located on his own land. While the STW(e) scheme-holder is somewhat restricted by the availability of a suitable

electrical connection within striking range, STW(d) pumpsets are untethered and are trundled from boring to boring by the scheme-holder. This gives the STW(d) beneficiary an element of flexibility in irrigation operations that is the source of envy to all other scheme-beneficiaries; it also accounts for highly energy-efficient behaviour on his part. As to how much of this energy-efficiency is due to this flexibility, and how much due to higher cost-consciousness, this is a question still open, although it may be rationally expected that these two different incentives towards energy-efficiency complement each other.

*WBSMIC, Schedule of Rates,1989.

CHAPTER VI

SUMMARY & CONCLUSIONS FROM THE STUDY

6.1 Introduction

The object behind the study has been to analyse the avenues for and the impact of the penetration of electricity into the rural sector, particularly in relation to their development implications. In certain respects the study is qualified by its assumptional and methodological fabric. First of all it is regional in nature, because the task of undertaking a national-level perspective on its themes to this level of detail would have been too daunting for a single work of research; moreover the endowments of both agricultural and power resources in a country as large as India are subject to wide-ranging zonal diversity, thus rendering comparison across regions infructuous. Secondly, the framework chosen in order to impart tractability to its issues is that of a case-study, and thus its empirical results are essentially valid for the region of Cooch Behar, or at the best for regions having close agro-climatic and infrastructural similarity to it. But despite these limitations, a study of a region like Cooch Behar has intrinsic merits: there is little research literature on such areas of eastern India, with high rainfall characteristics, with primarily agrarian modes of production, and with relatively low penetration of technology, that addresses power and irrigation aspects, in contrast to the rich parallel literature sources found for the relatively-advanced agricultural states of the country. In this respect the study, it is hoped, fills in a perceptible gap in extant research.

In terms of its assumptions the study visualises irrigation as being a prime agent in rural transformation. This view, although assumptional in nature, is backed by the peculiar circumstances of rural development in India, where non-farm activity and rural industrialisation have yet to reach a level that would make them independent transforming agents, on the scale they have reached in other resurgent economies in East Asia. Tying up this thesis with electricity, the highest potential, in a rural context, of the growth of the power sector in India is as a producer good. Moreover, with economic activity in the rural sector having a high agricultural and low industrial content, the only way that electricity can become a productive input instead of merely a consumptive one is if large-scale use is made of it in irrigation technology; although future scope is created by cheap availability of electricity for a higher degree of mechanisation in farm operations, this only comes as a second phase after consolidation of the productivity gains from irrigation into a more capitalised agriculture. In India in its present situation, and more particularly in Cooch Behar with its backward agrarian economy, the essential mode of production is still of the peasant producer type, and such capitalistic elements are a long way coming. Thus the study has questioned the tacit assumption that seems to have been present in power planning in India, that electricity is productive only inasmuch as it finds industrial use, and that this productivity is essentially urban in character.

RESEARCH ISSUES

The set of broad qualitative issues that provide a frame of analysis for the study are drawn from existing literature that has been extensively reported in the introductory chapter. However, a

reading of the literature brings to light both consensual elements extant in it as well as points where difference of opinions and debate still persists. In summarising both the above aspects of the literature, it is convenient to proceed schematically by first tracing points of convergence and then those of divergence.

6.2 Irrigation

Taking first the literature which has direct bearing on irrigation, the necessity for expanding irrigation-cover to stabilise Indian agriculture and to prevent the type of food scarcities that hit the economy during the pendency of the Second and Third Plans is well recognised. Although irrigation impact varies between states and regions, primarily because of climatic factors, there is agreement on the objective indices of impact-measurement. Introduction of irrigation therefore has positive effects on agricultural yields, cultivated areas and the size of the resultant output, while also being accompanied by changes in cropping patterns and crop-sequences designed to achieve optimality in the above. Irrigation provides insulation against weather-related crop fluctuations by stabilising farm output, and generates enhanced agricultural employment, especially in the initial phases where it is not accompanied by farm mechanisation; tendencies to substitute cheaper female labour for relatively expensive male labour are also observed, especially under scarcity conditions.

Differences by region in the above impact categories do occur because of variation in irrigation needs. Under rain-scarce semi-arid conditions where the pre-irrigation situation is that a mono-cropping and, moreover, of coarse crops, irrigation needs are highest and strongest yield responses are found. Under less arid conditions, yield response is lessened, for irrigation, although other impact categories remain in strong evidence. For high-rainfall areas such as the area for case-study, yield responses may be mediocre but crop-related responses are still strong because of multi-cropping that spans the full agricultural year. However, a sacrifice is also entailed on account of cropping-shifts, for all regions; there is shrinkage in the acreage devoted to coarse and less water-sensitive crops. In India this sacrifice has particularly been felt on the pulses and oilseeds front.

Although a debate still centres on the cost-effectiveness of major versus minor irrigation schemes, especially on what exactly constitutes the full capital cost of these schemes, significant evidence in micro-studies spread over diverse regions points out the operational efficiency of minor irrigation, mainly ascribable to better water management. Major irrigation, on the other hand, shows wide divergence between the created irrigation potential and its utilisation, particularly, pointing to wastage factors both in terms of water and of investment. While the water-losses are largely transpirational and/or seepage-related, the possibility that investment may not be producing desired results has added focus to minor irrigation in recent years. Despite the ongoing debate, there is agreement on the need for conjunctive use of surface and ground water.

Technological solutions to irrigation comprise surface and lift delivery systems, the exact delivery characteristics of which are designed by irrigation engineers. In minor irrigation, the alternative lift-systems are powered by electricity or diesel oil. It is here that resource-based considerations enter into the study. Diesel-powered

irrigation is dependent on non-renewable, rapidly depleting fossil-fuel resource, the growing scarcity of which has imparted a steep upward thrust to price. Electrified irrigation is less expensive in resource terms as well as being advantageous to the cultivated in cost terms, but it is nevertheless restricted by the ready availability of power. This restriction can however be lifted by widespread and rapid rural electrification.

Another issue that surfaces during a reading of the literature on minor irrigation is in context of organisation and ownership; this is because of the preponderance of both state-ownership and private-ownership of the irrigation installations. While the state installations are of higher capacity and consequently have economies of scale, water-delivery modes are centralised and inflexible. Thus problems of water-losses and of utilisation of irrigation potential creep in. Private institutions, although disadvantaged by lower capacities, have flexibility as one of their virtues, and with their operation being entirely in the hands of the peasant proprietor, efficiency of use is maximised with minimal water-loss. In a country with little capitalist farming and a dominant peasant proprietor mode of production, minor irrigation particularly of the private-owned variety, is specially relevant. However, since both diesel and electric alternatives are found in private STWs, differences exist in the attendant energy costs. If electricity supply were reliable and dependable electrified STWs would possess definite operational advantages; however, because of the weaknesses in rural electrification, dependability factors are higher for diesel STWs, and performance factors highest for farmers having joint access to more than one source of irrigation. For this mix of reasons, the states where highest irrigation intensities prevail show higher dependence on non-renewable energy sources like diesel.

In its technological perspective irrigation facilitates the use of other modern agricultural inputs. Strongest complementarity is invariably found between the intensity of irrigation and the use of chemical fertilisers, the reasons being two-fold: the existence of adequate soil moisture is a pre-condition for effective application of fertilisers specially of the nitrogenous variety, and the cropping shifts induced by irrigation are to the more fertiliser-intensive crops. Thus linkages between irrigation and HYV as well as pesticide-use are also widely observed. The irrigation-employment linkage is strongest where cropping effects are strongest. Relating the foregoing to the case-study, the existence of substantial untapped reserves of groundwater would argue for their inclusion in irrigation plans, within the recharge capacity of the aquifer system. Certain advantages would derive from such inclusion: in view of the high capital cost of major irrigation projects and the lumpiness of investment in them, as also the long gestation period involved, such projects present a deferred solution to a capital-scarce country; on the other hand, minor irrigation presents a short-term solution capable of immediate implementation and yielding immediate benefits. It is these factors which have led to increased concentration of the irrigation effort on expanding minor-irrigation cover, especially under the impetus of added priority to accelerated food production and World Bank prodding.

Cost-effectiveness between irrigation systems involves some consideration of tariffs and rates; these pertain both to electricity and to water charges. Noting that resource-pricing is a guide to resource allocation, questions of whether the tariffs on agricultural use of electricity are adequate to guard against losses on the part of

SEBs, or too low in comparison to industrial charges, and whether volumetric tariffs inculcate better water-management practices have been explored, even though there is no convergence in opinions. On the electricity question, prevalence of a low agricultural tariff is justified by the magnitude of direct and indirect benefits accruing from irrigation, although low-load conditions do make RE a loss-making sector; industry, which enjoys low bulk-rates, however gives lower financial returns to the SEBs than its consumption would indicate. For irrigation waters, the marginal-cost pricing principle proves inadequate and further financial questions of whether capital costs should be partially reimbursed also arises. In areas of relative water scarcity a water-market is seen to emerge where supply of irrigation waters is extended to non-beneficiaries, with a profit motivation. Although increasing irrigation-cover, the emergence of water-markets raises prospects of over-deployment of groundwater resource. However a detailed study of Bangladesh reveals that fears on this count are unjustified, and that the private sector in irrigation has produced the most tangible agricultural results.

6.3 Rural Development

The next body of literature relevant to this study where consensus and divergent opinion needs to be pinpointed is the rich literature on rural development. The relevance of this work is drawn from its underpinnings of agrarian economies under agrarian transformation. Although there is agreement that developed agriculture has capitalist elements, the schedule of transformation by which subsistence-oriented agriculture eventually becomes commercial in orientation is a long drawn-out process, with a transitional market-oriented stage of transformation. As this process is concurrent with urban industrial transformation, the market is a device for surplus-transference, in the course of which factors like immiserisation and depeasantisation come into play through growing land inequalities, if the transition is investigated from the viewpoint of political economy. The length of the transitional phase is crucial to this. Exploitative linkages between industry and agriculture magnify rural poverty, and it is here that questions attach to the role of rural elites.

Concern with 'surplus' follows from Marxian approaches to rural agrarian transformation with a differentiated peasantry that thus possesses a class-structure; the neo-classical tradition gives no special attention to class phenomena, based as it is on abstraction. Studies of economic history for selected Western and Asian countries however lead to a certain amount of debate on the agrarian question, where findings ostensibly show natural coexistence of two inimical modes of production in agriculture and industry during transitional stages without class-conflicts emerging. In the Indian context trends towards commercialised agriculture are presently limited, and the peasant producer is likely to stay; colonialism and the post-feudalistic land relations that it sought to sustain are responsible for an absent trend towards capitalists agriculture. A stage of conflict between urban development and rural development is also explained by this Indian characteristic.

Specific rural development measures initiated in India are palliatives to poverty, seeking to retard the outflow of rural surpluses to urban use. However one area where the Indian experience is differentiated from that of East Asia is that rural non-farm activity and rural industrialisation has neither become a dominant nor a significant instrument of agrarian transformation. Thus much greater

attention must focus on the transformation of agriculture itself, even though the ultimate method of redistributive land reform is usually ignored on grounds of political expediency.

The primary requirement of an agriculture-based agrarian transformation, in a peasant producer model centres around increasing agricultural productivity. It is through this linkage that irrigation enters the rural development context. Rice-growing areas can, especially, be transformed because of the family-based labour-intensive nature of rice cultivation; however production modes would still remain traditional. But there is no consensus on this particularly when the East Asian context is left out and the Indian context reconsidered.

6.4 Electricity

The third body of literature relates to the power sector itself. Given the Indian contexts outlined above absorption of electricity by the urban industrial sector cannot be the only area of priority. Because of the importance, to overall economic development, of agricultural productivity and its enhancement, power needs to flow to agricultural uses also; as just seen, the alternative of rural industrialisation has not yet proved to be viable in India. Other methods of powering irrigation systems have higher cost involvement and thus reduce the small farmer's capacity to invest on other modern inputs; electricity, on the other hand, results in lowered irrigation costs at the farmer's level and permits higher applications of complementary inputs. Through this linkage electricity is able to trigger better agricultural performance and quicken agrarian transformation. Another aspect is that the lower energy costs involved in electrified irrigation facilitate access to smallholders too poor to go in for diesel alternatives. Among the private-held schemes, electrified irrigation would thus appear to be less elitist in character if its benefits were extended to all, thus promising agrarian transformation without carrying with it the danger of immiserisation of the peasantry.

POWER SCENARIOS

6.5 The National Scenario

India presently fares poorly in its per capita usage of energy. This is true both with reference to OECD countries as well as many other low-income countries. Wide variations are also found between states, with the level of industrialisation appearing to be the prime determinant of electricity consumption levels. Urban factors also have a role to play. Commercial energy in India comprises, mainly, coal, oil and electricity,but although the coal reserves (of non-coking variety) are plentiful and petroleum resources poor, the technology mix, dependent mostly on imports of processes, has a high order of dependence on oil. Coal, on the other hand, is significant to thermal generation of electricity since the hydel-thermal mix in generation capacities is as yet very low.

Power sector agencies operating in the country belong to both the Central and the state sector, since power is an item in the Concurrent List. Expedient factors in the development of power have dictated the situation where large thermal and hydel generation facilities have come up under NTPC and NHPC under the Central Government, but distribution responsibilities as well as most of the T&D network come

under the SEBs. However the concept of a National Power Grid has led to the constitution of regional electricity boards that cross-link zonal SEB systems through EHV tie-lines in the Central sector. Two reasons operate behind the constitution of interlinked grid systems: power generation capacities are optimally utilised with respect to regional demands with a provision for surplus power flows to deficit SEBs, and the non-uniform distribution of cost and hydel resources which would otherwise lead to generation instability by a real allocation, is optimised by power-sharing arrangements.

Growth of the power sector in India has been creditable both in terms of generation and consumption. However, since generation is heavily concentrated in thermal units, the thermal:hydel generation ratio is as yet too high to ensure full system reliability. Although hydel resources are abundant along the mountain ranges to the east, west and the north of the country, they remain largely unexploited at present; the bulk of generation thus being dependent on the coalfields located at various points in peninsular India. Nuclear generation is present in the western and southern power systems, where coal and hydel resources are relatively lacking, but as yet it comprises a minor proportion of total generation.

Sectoral demands for power in the country indicate bulk consumption in mining and manufacturing. Agricultural demand is a distant second but growing fast. Highest growth in consumption is registered by domestic consumption, although domestic usage of electricity is still primarily urban. Power supply is generally deficit throughout most of the country although the deficit rises and falls in seasonal cycles because of varying levels of hydel generation and seasonally-fluctuating demand in the agricultural and domestic sectors.

Problems assailing the power sector can be assigned to technical as well as organisational causes. Generation inefficiency and losses-in-despatch are high especially for SEB power; for this reason additions to SEB generating capacities are slow in the wake of delayed clearance from the CEA. Central-sector thermal generation has thus come to figure importantly in power planning, and because of its pithead locations, is able to insulate itself from poor coal quality and tardy railway coal-movements. However, the direct responsibilities of distr- ibution are largely in the hands of SEBs who have therefore to absorb distributive losses. The upshot is steadily worsening financial positions of the SEBs and the emergence of the large Central-sector power corporation as a role-model of financial and generation efficiency. Particularly in the Eastern region, high power deficit positions are the result of constant wrangling between Central and State agencies which has delayed vital installation of additional generat- ing capacity. Another distortion creeping in with the new power paradigm of giant STPS has been the lowering of the hydro:thermal generation mix to levels where insufficient hydel backup capacity exists in situations of thermal outages. Grid-failures and cascade-tripping are often the result.

An important component of the power system is the T&D network. EHV transmission lines in the Central sector are the vital link in the grid system, besides carrying power from the NTPC, STPS and NHPC into the grid; the lower-voltage transmission and the entire distribution network come under the SEBs and other such agencies. Although grid-transfer of power has been important in stabilising the distribution of grid-subsystems, inter-grid transfer of power, on which the concept

of a National Power Grid rests, is yet to materialise and thus power inequities still prevail between the regions of the country.

For this study the component of the power sector that is of special significance is rural electrification. Emphasis on RE coincides with the belated recognition that electricity is not solely an urban industrial input. When the responsibilities for RE were in the sole hands of the SEBs, the progress of village electrification was slow on account of funding crises and the loss-making character of rural operations which resulted from low-load and high transmission-cost conditions. Till the Fourth Plan, therefore, the thinking seem to have been that power would feed the rapid industrialisation that would be conducive to a high rate of development. Failures on the agricultural front, and failure of the urban industrial sector to deliver, resulted in the changed focus where RE projects are executed by the SEBs and funded and coordinated by the REC. Two RE activities particularly relevant to this study, are village electrification and pumpset energisation which have both received a fillip from REC assistance since the late 70s. To this extent the high impact-potential of electricity on the irrigation system, which is the area of this study, has received official recognition. However certain problems characteristic to rural electricity systems have now appeared in SEB operations. T&D losses have multiplied over the rural network, high seasonality in agricultural demand for electricity has brought in seasonal instability into SEB load profiles, and the overall financial position of the SEBs has steadily worsened. But this does not detract from the necessity for the benefits to be drawn from RE - the benefits, although largely indirect, are very high, basically because of the agrarian considerations mentioned earlier. So also, they are the only way of diverting some of the gains from planning to rural areas.

6.6 The Regional Scenario

From the point of view of the case study, focus is on the Eastern region. The constituents of the EREB are the state power agencies of Bihar, Orissa and West Bengal along with NTPC, NHPC and DVC in the Central Sector. The EREB system is thermal-dependent to the extreme, although a large untapped endowment of hydel resources exists in Himalayan belt. The prime consumption centre for the entire region is however, Calcutta, because of its huge concentration of industrial activity. Power transfers between EREB constituents are thus highest for CESC which does not however export any power. Other systems generally show two-way exchanges. The WBSEB is the exclusive distributing agency in the State of West Bengal, as far as RE is concerned.

States of the Eastern region, as can be seen from Table 2.1 have low consumption profiles for electricity, Bihar having the lowest. Relative poverty and low electricity consumption rates seem,therefore, to coincide. Whereas domestic consumption per capita in West Bengal is fairly high, it needs to be remembered that much of this consumption is accounted for by metropolitan Calcutta with the rural consumption rates being correspondingly low; the State also has higher density of population. Low consumption does not necessarily indicate absence of demand, on account of depressed generation conditions in the region. The especially-low hydro-component in generation in the Eastern region renders the grid unstable, with the result that its component systems often operate in isolation from each other because of outages in linked systems. Line voltages are erratic and forced load-shedding is frequent. In this situation, consumptive figures are not true

indicators of the state of electricity demand, but of 'suppressed' demand; this is most pronounced for the West Bengal systems. This is ironical in the face of the fact that the three states of Bihar, Orissa and West Bengal straddle a vast mineral-rich belt which is the centre of extensive mining operations - absolute scarcities of power take away the locational advantages of situating large industry in the vicinity and the states therefore are poor, with large tracts within them devoid of any sign of industrial development. For such backward sub-regions there is not much of a choice between developmental paths: a wait for an industrial awakening may be long and interminable because of a chronologically-deficit power position which is likely to stay for some time to come, and such a wait is therefore futile. However, aquity demands that the fruits of development be extended as uniformly as possible to the people living in no-industry regions too and, considering that agriculture in the region is still backward, considerable scope for electricity-absorption into the rural sector should exist particularly via irrigation. But it must be noted that power instability hits the rural sector too. Breakdown in rural electricity supply reduces the hours of irrigation and the technological impact, or else forces farmers to go in for more expensive energy alternatives like diesel. In view of the fact that Eastern region is a virtual storehouse of India's most abundant energy-resource i.e. coal, it is a travesty that whatever irrigation exists in the region should have excessive dependence on an imported energy-resource like diesel. With thermal generation in India largely being fuelled by coal, availability of abundant electricity to rural consumers of the Eastern region would have seemed to be a logical conclusion; the fact that this has not happened destroys whatever advantages this resource-endowment would have indicated.

6.7 The State Scenario

Unlike most other state system, the West Bengal power system is characterised by a multiplicity of power agencies including the large private-sector CESC. Of these, the WBSEB is principal. Most of the state, and all of the rural sector within it, is served by the WBSEB T&D network, and although the WBSEB absorbs a sizeable chunk of generation from NTPC, NHPC and DVC in the Central-sector, distributional responsibilities are almost exclusive to it. Hydro: thermal mix in WBSEB generation is critically low, accounting for much of the state's power instability, although other factors such as lower PLFs, high T&D losses and labour inefficiencies all contribute to the adverse power situation. This does not however mean that hydro potential in the state is similarly low, as large hydel resources have been estimated for the northern Himalayan region. A number of projects, both thermal and hydel, that are to come onstream over the next two plans would significantly add to total generation in the State, with a large chunk of this capacity adding to WBSEB generation, even under suppressed conditions. Demand for power in West Bengal is expected to increase sharply, although differences in demand-structure and peaking loads exists between WBSEB and CESC systems: CESC being an urban load, power offtake is more uniform over the year, whereas WBSEB which caters to the entire agricultural and rural sector exhibits seasonality in coincidence with cropping seasons. In the rural sector therefore, the presence of energised irrigation is already making its presence felt even under present conditions where irrigation-cover is low for most of the state. In future scenarios, seasonal load characteristics will be magnified by the extension of irrigation and solutions will have to be found that are able to stabilise power distribution.

Such solutions have implications for both T&D and generation. Induction of a large hydro component into the WBSEB system is a must; moreover, with hydro resources in the state being suitably located so as to serve electricity needs of the northern region, the present problem of high T&D losses over an extensive network would be mitigated. Strengthening of the T&D network is, however, also necessary: arterial transmission lines need to be upgraded in capacity and their reach extended, and distribution networks in the rural sector need to be expanded to bring electricity to a larger number of cultivators. Also, some rethinking on whether electricity in the State should continue to be exclusively targeted towards industrial development alone, which is responsible for the industrial concentration in and around Calcutta and a lop-sided pattern of development, is long overdue. Such rethinking may facilitate industrial dispersion and also ward off the choking of urban Calcutta by rural migrants.

6.8 Power in North Bengal

An examination of the power sector in North Bengal yields special features that qualify the nature of operation, and the availability etc. of power, both present and future, to the study region. It is noted that generation within North Bengal is predominantly hydel, in keeping with the resource endowment of the region, and also that a very considerable unutilised hydel potential exists in the region which, if fully developed, would make North Bengal generation the major hydel backup for the Eastern region.

With North Bengal falling entirely within the WBSEB T&D network, a study of power development here has no multi-agency aspects, unlike in South Bengal. Justifications included in techno-economic and projective studies of North Bengal's power demand mention, importantly, the tea load. This is an agro-industrial load, with North Bengal presently having no major industry. The scope for RE and rural load-development also finds mention here and there, but in view of the extensive paucity of onstream power, and a power-planning rationale that placed almost exclusive emphasis on the urban industrial sector, neither has this been realised nor has electricity-use in agriculture and its economic impact received due attention. North Bengal is either conceived of as a low-load low-demand area or else load development within this region is considered uneconomic. Keeping this in mind, the load pattern in North Bengal is primarily accounted for by urban domestic and commercial demand.

Elsewhere however candid admission of the actual conditions of low demand is found. The tea-industry being cultivation-oriented, load-cycles on account of it would coincide with the hydro-generation cycle and thus would not overload the WBSEB system at times of the year when power deficits were most adverse. Power demand in North Bengal has been artificially suppressed by ignoring the tea sector and the rural sector (particularly agriculture), and by the limitations that restricted power imposes on the development of such industries based on local resources that are eminently suitable for location here. The problem of low load is thus characterised by circularity: low power availability leads to low loads, and low loads to low power availability. The industrial, and even the agricultural backwardness of the region, can thus at the least be particularly ascribed to the deprivation it suffers through non-availability of electricity in the amounts required to trigger economic development. Priorities in the power system in West Bengal may have dictated this state of affairs.

With huge industrial concentration in Calcutta, left over from a time when West Bengal was an industrial leader among Indian states, as well as the concentration of commercial activity in a highly populated mega-city, the bulk of power sold in West Bengal by power agencies has been in Calcutta. Power-planning priorities within the state have also converged around the metropolis, in the suction characteristic of a city-hinterland model from older developmental concerns. While focus on the industrial heart of the state is logical, in the face of thinking that exclusively relates economic development to industry, it is also responsible for producing great imbalances within the state. Another way in which it has worked to the detriment is that problems of civic administration and provision of civic amenities have reached near-breaking point in Calcutta, because of the suction exercised not only on resources but on people.

A more decentralised setting where both industry and agriculture developed in a dispersed fashion throughout the state might have conceivably been more desirable, especially in view of the new thinking emergent from the Fourth Plan and the establishment of the REC, that the benefits of developed agriculture and irrigation, especially the indirect benefits, are crucial to the spread of development in an agrarian setting. Although elements of this thinking are found in the RE thrust in the State, this has been much more marked in districts of South Bengal than in the North. At a time when grid concepts have not fully entered the power system within the State, the paucity of generation in North Bengal precluded provision of electricity to agriculture there on a sizeable scale. The interlinked grid that is now in existence and the free flow of power within it has removed this constraint but weaknesses in rural T&D systems still prevent a change in the RE situation.

6.9 The Scenario in the Study-Region

Low-load and low-demand characteristics of North Bengal power scenario apply to Cooch Behar also, except that Cooch Behar has no electricity resources within the district itself. Generation patterns for North Bengal installations show features specific to the high hydro:thermal mix, with bulk generation confined to the monsoon months. In the face of the low agricultural demand, which is nevertheless present, peaking loads during the boro season have to be met by pressing high-cost diesel generation into service; this happens during, rabi also. Cooch Behar, being an agrarian district with no industry and low urbanisation, accounts for lower margins of sales and connected loads compared to the other North Bengal districts, coverage of the rural segment being particularly low. The same can be said for agriculture also, and the district appears to be a good setting for case-study in the context of the problem which this study addresses.

Taking the focus to RE, low-load characteristics in Cooch Behar would appear to be the result of suppression of pent-up agricultural demands, with the deficit power position of the WBSEB as a cause and the weak rural T&D network in the district as the means. This has bearing on the analysis of projective demands. Perspective studies, which seek to assess growth of unrestricted power demand take account of the present suppressed nature of the power load: for Cooch Behar they recognise the large potential agricultural load that would arise on account of RE programmes like pump energisation and conversion of diesel pumping loads to electrified ones. Load projection study by the WBSEB itself, seem almost oblivious to the fact of suppression and scale down projected loads for the district drastically, and

particularly the agricultural component of this load. This difference is partly on account of the methodologies adopted. Whereas perspective studies use regression methodologies, load projection studies are largely based on 'past-trend' methods. Since the base-year patterns in the latter already represent restricted demand scenarios, the projection extends these restricted scenarios indefinitely. Thus in the absence of perspective power-planning, two kinds of distortions creep in:

i) earlier power priorities which emphasise industry and the expense of agriculture are extended to the future;

ii) on a comparative scale, districts where earlier power loads were constricted by suppression factors continue to be disadvantaged on a long-term basis.

Other aspects speaking against 'past-trend' projections are that low loads that might be ascribable to T&D weaknesses are not specifically identified as being so and thus a little scope emerges to rectify transmission disbalances.

Yet, since system-planning by the WBSEB is likely to be based on its own projections and methodologies, negative features of these would eventually be executed in reality. The picture of development that would then emerge would perpetuate backwardness in districts which are already so as also the head-start of districts which have presently stolen a march over others. Lop-sidedness in the State's development profile would not only be maintained but also exacerbated and the suction of the Calcutta region would not be neutralised by the developmental process in the near future. It is this issue that is the cause of concern and defines the relevance of the present study.

However a word may be said, in passing, in mitigation of this difference in perceptions. There has always been reluctance on the part of the SEBs to place too much of a thrust on RE; this is because RE is a losing segment of the power sector and the financial position of most SEBs is already precarious. In the case of West Bengal, multiplicity of power agencies but concentration of the entire rural segment in the WBSEB system confounds the problem; whereas profit-generating urban segments are shared between the WBSEB-CESC systems, losses in the rural sector entirely accrue to the WBSEB. The same applies to power-exchange between the Central and state sectors - T&D losses and their financial implications have largely to be borne by WBSEB. Low growth in the WBSEB generation capacity also compounds the financial crunch.

6.10 The Case-Study

Investigation into the problem to which this study bears reference requires a study-region whose economy has predominantly agrarian features. However, as the impact of electricity is also being studied in the context of irrigation systems and thereby on agriculture, agro-climatic features specific to the study region also qualify the impact.

Cooch Behar has all the features that render it suitable for the case-study in the context of a largely agrarian economy. Being a feudatory State prior to Independence, land relations possess the attributes peculiar to the peasant producer mode of production: the agricultural segment dominates the occupational profile, main workers are high in both male and female categories and are mostly owner-cultivators, and marginal workers few. Landless agricultural labour categories are small and of recent origin, mainly comprising migrants

from neighbouring Bangladesh. The degree of urbanisation in the district is low and the towns have come into being as trading centres catering to a largely rural population. Literacy rates too are low and agriculture still retains many traditional elements, both in cropping and methods. Furthermore as the penetration of modern agricultural technology is very recent, its impact-features are readily identifiable as they have not been overlaid by other economic factors. Industrial activity being practically absent, the agrarian society in Cooch Behar is still insulated from the pulls of alternative occupations of a non-agriculture nature. One special feature of the agrarian situation in Cooch Behar needs to be taken note of, however. With land reforms and land redistribution under 'Operation Barga' in West Bengal the special advantages which rural elites enjoy have been considerably diluted, to the extent that in Cooch Behar it could safely be assumed that the 'elite' factor is no longer a principal determinant of the access to agricultural technology; in this respect the district may be dissimilar to agrarian societies elsewhere in the country.

Agro-climatic features place Cooch Behar in a high-rainfall region with undifferentiated topography and perennial riverine systems that account for the alluvial nature of soil and its acidic qualities. Croppped areas and cropping intensity is high for this combination of reasons, and average holding sizes are small, reflecting both crowding on land and the large number of owner-cultivators.

However with little land now available for extension of cultivation,farming as well as the agricultural employment is land-intensive, and low productivities would prevail without the intervention of modern agricultural technology. Traditional cropping is mostly of paddy - the subsistence crop- and jute and tobacco, which are traditional cash crops; irrigation however permits diversification into potatoes with vegetables as winter crops.

In comparison to other districts Cooch Behar is relatively small in land area and relatively resource-poor as no large timber-tracts or hydel resources or mineral deposits occur. Nor has tea, which was a major commercialising influence on the economies of some other North Bengal districts, taken a foothold in Cooch Behar. Thus Cooch Behar and its economic future is largely dependent on the nature and pace of agricultural development; in agriculture, the district's performance is relatively creditable both in a North-Bengal and in a West-Bengal context, this is despite the fact that agriculture is still largely traditional in nature. In this situation, focus comes to rest on the irrigation potential in Cooch Behar.

The natural resource with which Cooch Behar is plentifully endowed is groundwater, much of which is presently untapped. Irrigation development in the district has however been slow and only around 10.5% of the total groundwater potential is being utilised, in the absence of major irrigation schemes that would cater to the whole of the district. Exploitation of this groundwater reserve appears to be the only way that quicker economic advancement can be set into motion.

This ties in with the overall national focus on minor irrigation. Although national priorities have given historical precendence to irrigation requirements in the arid and semi-arid zones, the joint impetus generated by food production programmes and poverty alleviation has now extended these prioritie to regions where rain-scarcity is not absolute but relative i.e. between calendar months.

With this trend emerging, minor irrigation has expanded in West Bengal and in Cooch Behar too. Both state- and private-sector irrigation is now found to be present in Cooch Behar. However the power scarcities earlier alluded to make the irrigation schemes highly diesel-dependent. For privately-held schemes, cultivation response has probably been constrained on account of this, as the higher energy costs of diesel irrigation place a larger financial demand on the scheme-holder's resources.

Diesel-powered irrigation, throughout the country is out of necessity rather than choice, the necessity being two-fold. Firstly, diesel-powered irrigation compensates for uncertainties in the supply of electricity to the agricultural sector. Secondly, diesel-powered irrigation is the only recourse where the electricity network is in an undeveloped state. In Cooch Behar both factors would appear to operate, but the latter would be, by far, the most expedient. As a means of agrarian transformation, diesel-powered irrigation would appear to be more elitist in character because of its stringent financial parameters. Electrified irrigation, on the other hand, and especially that of the DTW-type, would appear to be more egalitarian in that less differentiation would be made between scheme-holders and non-holders on a financial yardstick, although inefficiency and wastage problems peculiar to the state-sector would still persist. In Cooch Behar, state-sector irrigation also shares these drawbacks. However, with less differentiated landholdings a large chunk of beneficiaries in irrigation seem to fall within the smallholder category as expected in a peasant producer model.

It thus remains to be seen whether, with their divergent energy costs,electrified schemes reveal differences in performance attributes compared to diesel schemes. For example, it might a *priori* be expected that STW(d) beneficiaries are more resourceful in their use of irrigation to compensate for the disadvantage of having high energy costs, or that both diesel and electrified STW scheme-beneficiaries would exercise better water management to minimise water-loss and optimise water-use; both the a *priori* attributes would be visible through a consideration of post-irrigation cropping patterns and seasonal intensities thereof, and intensities in the use of complementary inputs. This was sought to be investigated in the course of the sample-survey.

One of the conceptual riddles in executing a sample study of a problem that has its roots,partially, in the engineering and technical complexities of irrigation systems, related to how the survey was to be formulated. Since the field of operations was agriculture, data collected would relate heavily to the cultivational aspects of the problem. However, the points of interests to the study were the intrinsic differences that might exist in the performances of different minor irrigation schemes classified by energy-source. The study relates to electricity as much as to irrigation and, in fact, it was the impact of rural electricity-use rather than the impact of irrigation per se that had to captured by the sample study.

Another conceptual difficulty is related to analytical methodology. Since irrigation creates both direct and indirect benefits in its capacity to raise agricultural productivity and thus has strong complementarities with the use of other agricultural inputs and choice of technology, the utility of micro-level studies in the literature had hitherto been considered limited, precisely because of non-decomposebility of the aggregate irrigation impact emanating from

joint application of a package of modern inputs into individual components.Standard regressional methodologies in other extant studies were found to have faced this critical comment from time to time.

As a way out of both these conceptual difficulties, the sample-study was designed to evaluate the disaggregated irrigation impact keeping distinctions between scheme-type and energy-source intact; and to apply multivariate analysis to the task of impact assessment, in the form of Principal Components. Thus variations in scheme performance could be related to variations in input-outlays which would reflect performance and perceptions of different categories of scheme holders. Furthermore, Principal Components, as means of compacting variance, was ideally suited to analysing major sources of variation, keeping their integrity intact by reallocating variance proportionately to the scale of direct and indirect impacts enjoined by the use of each agricultural input.

Findings from PC-analysis brought differential performance to light. It was found that fertiliser-use was the one factor that created greatest linkages, followed by HYV technologies, etc. This finding obviously concurs with the results of studies in other parts of the country to which references is found in the literature and thus high- rainfall conditions do not change the ground-situation with respect to modern technology.

Differences in scheme performances were highlighted by the analysis of PC-scores which yielded schemewise rankings. From this, definite conclusions emerged. The technology-mix which produced the greatest resultant agricultural variation was one where the electrified sector scored the highest. Even in conditions where the technology-mix (as defined by PC-coefficients) had lesser outlay on modern inputs i.e. in lower-order PCs with lower loadings on modern inputs like, fertilisers, HYV seeds, pesticides, etc., the electrified sector still scored highly. It would thus appear that regardless of the technology-mix affordable to a particular scheme-eneficiary, the existence of electrified irrigation still resulted in the highest possible performance impact. Although a cultivator might face constraints in meeting the very outlays associated with modern agriculture, he stood to gain the most if he was an electrified-scheme beneficiary. Even though state-sector performance was inferior to privately-owned irrigation systems, as also reported in other studies in the literature, the finding relating to highest competitive efficiency extended to the electrified state-sector too. Diesel irrigation, although facing high energy costs, made itself competitive by exercising good water-management and efficiency.

With patterns like this emerging for all the highest-ordered PCs it was possible to conclude that irrigation performance was best for the electrified sector, which moreover required the lowest energy-outlay on the part of the former. Thus the main thesis in the study i.e. that electricity-use in the rural sector has a high technological impact, was borne out. That this finding should come out in a study region where transmission and power load have yet to advance indicates the potential that electricity has to the generation of rural transformation in the region.

Although the more-costly, private STWs cater to the class of farmers economically more better-off than their counterparts, their irrigation performance, water-use efficieny and ability to assimilate modern technology is the highest. Preponderance of diesel STWs in this

category is dictated by the shortage of power in the region. Considering their otherwise creditable entrepreneurial qualities, conversion of diesel installations to electrified ones would have a salutary impact on agriculture in the region.

It must however be taken note of that differences in economic standing between STW beneficiaries and other cultivators are relative.In West Bengal. Following land reform under 'Operation Barga', the bulk of cultivators now fall in small and marginal categories.The findings of the study,which concurs with other studies within the regional perspective, is therefore that smallholders, who preponderate in the private STW-sector, have proved to be more efficient in their response to new agricultural technology. In this respect,the present study establishes that cultivator-efficiency is relative rather than absolute and that the same entrepreneurial motivations which, in other states of the country, characterise large and medium farmers have been found to exist even where the holding size of owner-cultivators have been truncated through land ceilings.In the sample study this contention is established in the section on land.

6.11 Major Findings

The study establishes differential responses within the irrigation system by category of scheme. The outlays that the cultivator has to make towards the various inputs are the instruments by which these responses are revealed. With irrigation becoming significant to the agricultural technology-mix, the energy costs of irrigation, and irrigation tariffs in the case of some schemes are the determinants of the technology-mix affordable to each individual cultivator as also the agricultural impact generated. Variations in technology-mix are represented in the differences in croppping patterns ultimately chosen by the cultivators. Since clustering is present for each scheme in the PC-analysis over the differentiated irrigation profile, this conclusion carries. As closest clustering is found for STW(e), this scheme emerges as the most progressive in terms of its choice of technology-mix. This is because STW(e) enjoys both the benefits of lower energy outlays and the entreprenueral advantages of being under private-ownership. STW(d), in the face of greater energy-constraints has to be more circumspect, but this has proved to be an encouragement to better management, both of water and of technology. Conversion of the diesel sector to electricity would transfer the economies of cheap energy-use to it, while keeping management features intact.

On the technical side these features are present in the efficiencies of energy-management, leading to the conclusion that private sector schemes are considerably more efficient than the state sector, and that diesel irrigation more efficient among these. Labour creation and opportunities for employment are also related to scheme-type with the electrified sector performing well, especially because of its concentration on highly irrigation-sensitive and labour-intensive boro cultivation.

Although the study has not had an explicit class-orientation, certain features relevant to the agrarian question have emerged. Once again it must be remembered that the study region is one where extensive land reform has taken place. Inspite of this, the process of elite formation is present in rudimentary form, primarily as an impact of irrigation and agricultural technology. Better performances on the part of privately-held schemes are already affecting their leasing

behaviour and can eventually consolidate into outright land purchases. In this process it is the non-beneficiaries, highly significant in number, who will lose their land. This is because non-beneficiaries, being un-insulated by irrigation, are excluded from the agrarian transformation engendered by it. In a region, backward in nature, where the spread of irrigation is as yet limited by a number of constraints of which the availability of power is most critical, access to irrigation is itself an elitist feature and offers an upper hand to the cultivator who has irrigation.

It in this connection that the priorities of the power sector need to be reassessed. The importance of electricity in rural development has been established time and again, in other studies as well as the present one. For an agrarian economy where penetration of urbanisation and urban industry is abysmally low and is not likely to increase for a long time to come, the present power priorities prescribe backwardness, in perpetuity, leaving the rural population outside the pale of economic development. A rural electrification thrust, on the scale found in the agriculturally-advanced states, then appears to be the only method which can change this situation. More focus also needs to be given to high-rainfall regions where irrigation is conjunctive to rain-fed cultivation but is nevertheless essential. In the specific context of Cooch Behar, the region chosen for case-study, scope for productive use of electricity by the rural sector is tremendous. Exploitable hydel resources abound in its vicinity, which have not received adequate attention on the false premise that electricity demand in a largely agrarian setting is low. The premise owes its existence to a scale of industrial priorities in the power sector that ceases to be relevant in the face of the growing rural-urban divide. In conclusion, a new scale of priorities that recognises both the impact of electricity on rural development and its immense future potential must urgently be evolved.

BIBLIOGRAPHY

1. Acharya Sarthi. : Agricultural Wages in India,A Disaggregated Analysis,Indian Journal of Agricultural Economics, vol.XLIV,no.2, April-June 1989.

2. Acharya S, : The Productivity Criterion of Unemployment,Development and Change, vol 14,no.1,1983.

3. Adinarayana S. : Impact of Irrigation on Employment, Farm Productivity and Income Under Kakatiya Canal of Sriramsagar Project in Andhra Pradesh, Indian Journal of Agricultural Economics,vol.XXXIX, no.3,July-September,1984.

4. Azad M.P.,Singh R.I.,Yadav,R.N. & Singh C.P. : Economic Efficiency of Tubewell Irrigation in Kanpur District, Uttar Pradesh (A case Study), Indian Journal of Agricultural Economics, vol.XXXIX, no.3, July-September, 1984.

5. Babu Suresh Chandra & Hallam Arne : Evaluating Agricultural Energy Policies Under Uncertainty : The Case of Electricity in South India. The Journal of the International Association of Agricultural Economists, vol.3, no.3, October 1989.

6. Bami P.S. : NTPC'S Role in the Development of Power in India : Indian Journal of Power & River Valley Development. December 1989.

7. Bardhan P.(ed) : The Economic Theory of Agrarian Institutions, Clarendon Press,Oxford,New York, 1989.

7. Bardhan P. : Marxist Ideas in Development Economics: An Evaluation, in Roemer,J.(ed) - Analytical Marxism, Cambridge, 1985.

8. Bhalla Sheila. :Trends in Employment in Indian Agriculture,Land and Asset Distribution, Indian Journal of Agricultural Economics, vol.42, no.4, 1987.

9. Bhalla Sheila : Technological Change and Women Workers : Evidence from the Expansionary Phase in Haryana Agriculture, Economic & Political Weekly, vol.XXIV, no.43, October 28,1989.

10. Bhowmik K.L.(ed) : Rural Development, Inter-India Publicat-ions, New Delhi, 1988.

12. Binswanger H. : Attitudes Towards Risk: Theoretical Implications of an experiment in Rural India, Economic Journal,91,867-890.

11. Bose Ashish : Demographic Diversity of India, 1991 Census, State and District Level Data - A Reference Book, B.R.Publishing Corporation, Delhi, 1991.

12. Breman J & Mundle S(ed) : Rural Transformation in Asia, Oxford University Press, New Delhi, 1991.

13. Charan A.S. : Impact of Irrigation on Agriculture: A Farm Level Analysis, Indian Journal of Agricultural Economics,vol.XXXIX,no.3,July-September, 1984.

14. Chaudhuri S.K. : Minor Irrigation - Problems and Perspective in West Bengal (A case study), Indian Journal of Agricultural Economics, vol.XXXIX,no.3,July-September, 1984.

15. Chaurasia R, Sharma, P.K. Tiwana,D.S. : Agrucultural Land Use under Major Crops in Punjab, The National Geographical Journal of India, vol.37, part 4, December 1991.

16. Chen A Martha :Women's work in Indian Agriculture by Agro-Ecologic Zones : Meeting Needs of Landless and Land-Poor Women, Economic & Political Weekly, vol.XXIV, no.43, October 28, 1989.

17. Desai Ashok V. : The Indian Electric Power System : Economic & Political Weekly,October 10,1987.

18. Dev S.Mahendra :Constraints on Agricultural Productivity : A District Level Analysis, Economic & Political Weekly,vol.XXVI, no.39, September 28,1991.

19. Dharmalingam A :Agrarian Structure and Population in India A Selective Survey, Economic & Political Weekly, vol.XXVI, no.26, June 29, 1991.

20. Dhawan B.D. : How Stable is Indian Irrigated Agriculture? Economic & Political Weekly, September 26, 1987.

21. Dhawan B.D. : Indian Irrigation : An Assessment, Economic & Political Weekly, vol.XXIII no.19, May 7, 1988

22. Dhawan B.D. : Irrigation in Kerala, Economic & Political Weekly, vol.XXII no.50,December 10,1988.

23. Dhawan B.D :Impact of Irrigation on Farm Economy in High Rainfall Areas: The Kal Project, Economic & Political Weekly, vol.XXII no.52 & 53,December 24-31, 1988.

24. Dhawan B.D. : Mounting Antagonism towards Big Dams, Economic & Political Weekly, vol.XXIV no.20 May 20, 1989.

25. Dhawan B.D. : Major and Minor Irrigation Works: Cost Aspects of the Controversy, Economic & Political Weekly, vol.XXIV, no.39, September 30, 1989.

26. Dhawan B.D. : How Reliable Are Groundwater Estimates? Economic & Political Weekly, vol.XXV, no.20, May 19, 1990.

27. Dhawan B.D, : Irrigation in India's Agricultural Development: Productivity,Stability,Equity, Sage Publications India Pvt. Ltd.,New Delhi, 1988.

28. Dhawan B.D. & Datta,Harshran Singh. :Impact of Irrigation on Multiple Cropping, Economic & Political Weekly,vol.XXVII, no.13, March 28,1992.

29. Dhawan K.C. & Mittal J.P. :Energy Scenario of Paddy and Wheat Production in India, Journal of Rural Development,vol.9 no.4,July 1990.

30. Duvvury Nata. : Women in Agriculture : A Review of the Indian Literature, Economic & Political Weekly, vol.XXIV, no.43, October 28, 1989.

31. Ezekiel H.(ed) : The Economic Times' Statistical Survey of the Indian Economy,Vikash Publishing Pvt.Ltd.,Gaziabad, 1984.

32. Gadgil D.R. :Economic Effects of Irrigation, Gokhale Institute of Politics & Economics,Poona,1948.

33. Ghatak A.:An Overview of Power System Management in West Bengal with Reference to West Bengal State Electricity Board in Particular Power Systems Management, Indian Journal of Power & River Valley Development, January-February 1986.

34. Ghosh Arun : Management of Water Resources, Economic & Political Weekly, Vol.XXIII,no.40, October 1, 1988.

35. Ghosh M.G. : Impact of Irrigation on Income and Employment - A case Study in a Bengal Village, Indian Journal of Agricultural Economcs, vol.XXXIX,no.3 July-September,1984.

36. Ghosh Nilabja :Role of Fertilizer and Irrigation in Determining Cropping Intensity : A Regionwise Study of Andhra Pradesh, Indian Journal of Agricultural Economics, vol.45, no.4, October-December, 1990.

37. Giri A.K. & Mallik G. : Some Economic Aspects of Public Source of Irrigation - A Comparison with Private Source of Irrigation, Indian Journal of Agricultural Economics, Vol.XXXIX, no.3, July-September, 1984.

38. Gorter Pieter :Canal Irrigation and Agrarian Transformation,The Case of Kesala, Economic & Political Weekly,vol.XXIV,no.39,September 30,1989.

39. Guha Sumit : Labour Intensity in Indian Agriculture 1880-1970 - Some Findings, Economic & Political Weekly, vol.XXV,no.52,December 29,1990.

40. Hazlewood A. & Livingstone I : Irrigation Economics in Poor Countries, Pergamon Press Ltd. Oxford, 1982.

41. Hiremath K.C. : Rapporteur's Report on Socio-economic Impact of Irrigation Projects, Indian Journal of Agricultural Economics, vol.XXXIX, no.3, July-Sepremmber, 1984.

42. Hunter W.W. : A Statistical Account of Bengal,vol.X,Concept Publishing Company,New Delhi,1984.

43. Israelsen O.W. & Hansen V.E. : Irrigation Principles and Practices, John Wiley & Sons,Inc.,New York, 1962.

44. Iyer R.Ramaswamy : Large Dams: The Right Perspective Economic & Political Weekly, Vol.XXIV, no.39, September 30, 1989.

45. Iyer R.Ramaswamy : Large Dam Debate : A Response to An Intervention, Economic & Political Weekly, Vol.XXV,no.12, March 24, 1990.

46. Iyer R.Ramaswamy : Too Little Water or Too Much ?Economic & Political Weekly, Vol.XXV no.15, April 14, 1990.

47. Jain L.C. : Towards National Power Grid, Indian Journal of Power & River Valley Development, March 1984.

48. Jairath Jasveen : The Irrigation Debate - An Intervention,Economic & Political Weekly, vol.XXV no.2, June 13, 1990.

49. Jugale V.B. : Socio-Economic Impact of Minor Irrigation Schemes - A Case Study, Indian Journal of Agricultural Economics,vol.XXXIX no.3, Conference Number,July-September, 1984.

50. Kalita D.R. & Rajbangshi M. : Economic Evaluation of Deep Tubewell Schemes in Jorhat Sub-Division of Assam, Indian Journal of Agricultural Economics, vol.XXXIX no.3, July-September 1984.

51. Kalra J.C. : Commissioning in NTPC Thermal Power Stations, Indian Journal of Power & River Valley Development, March-April 1983.

52. Kochar B.S. & Gua G.L. : Rural Electrification in India, Indian Journal of Power & River Valley Development, May 1978.

53. Krishnan T.N. : Wages,Employment and Output in Interrelated Labour Markets in an Agrarian Economy - A Study of Kerala, Economic & Political Weekly,vol.XXVI,no.26 June 29, 1991.

54. Kulburgi V.C Gowda Srinivasa N.V & Buggi C. :Impact of Irrigation on a Peasant Village in Upper Krishna Project Command Area, Bhagirath, July-September, 1991.

55. Kurian N.J. : Employment Potential in Rural India: An Analysis, Economic & Political Weekly, Vol.XXV no.52, December 29, 1990.

56. Majumder D.D. : West Bengal Districts Gazetteers, Koch Bihar,1977.

57. Marx Karl : Capital vol.3, Progress Publisher, Moscow,1962.

58. Mishra S.Madhu(ed) : Rural Development in Eastern and North Eastern India, Publications Division,IIM, Calcutta, 1988.

59. Mishra R.S.& Gupta S.K. :Impact of Minor Irrigation Project on Cropping Pattern, Farm Income and Employment of Farmers in Ratlam District, Madhya Pradesh, Indian Journal of Agricultural Economics, vol.XXXIX, no.3,July-September,1984.

60. Misra S.R. : Impact of Irrigation on Production and Factor Use - A Case Study of Mayurakshi Canal in West Bengal, Indian Journal of Agricultural Economics, vol.XXXIX no.3, July-September,1984.

61. Mitra K.Ashok [b] :Water Resource Management, Economic & Political Weekly, vol.XXV no.4, June 27, 1990.

62. Mitra K.Ashok [a] : Major and Minor Irrigation Works, Economic and Political Weekly, vol.XXV no.16, April 21, 1990.

63. Mitra K.Ashok [c] :Agricultural Production in Maharastra, Growth & Instability in the Context of New Technology, Economic & Political Weekly,vol.XXV no.52, December 29, 1990.

64. Moench Marcus : Drawing Down the Buffer - Science and Politics of Ground Water Management in India, Economic & Political Weekly, vol.XXVII no.13, March 28, 1992.

65. Moulik T.K. Dholakia B.H. & Shukla P.R. : Energy Demand Forecast for Agriculture in India, Economic & Political Weekly, vol.XXV no.52, December 29, 1990.

66.Mruthyunjaya P.K :Crop Economics and Cropping Pattern Changes, Economic & Political Weekly, vol.XXIV, no.51 & 52, December 23-30, 1989.

67. Naidu B.S.K, : Potential Areas for Improvement in Productivity and Efficiency of Power Sector,Indian Journal of Power & River Valley Development,December 1990.

68. Narayan R.K : Power Development in India', Indian Journal of Power & River Valley Development, December 1990.

69. Pachauri R.K. : Energy and Economic Development in India, Praeger Publishers, New York, 1977.

70.Palmer-Jones R.W :Sustaining Serendipity ? Groundwater Irrigation,Growth of Agricultural Production, and Poverty in Bangladesh, Economic & Political Weekly, vol.XXVII, LLLLno.39, September 26,1992.

71. Parikh K. : Second India Studies: Energy, Macmillan, Delhi, 1976.

72. Patel Arun S. & Patel Haribhai F. : Economic Impact and Efficiency of Water Use - A Case Study of Dantiwada Canal Irrigation Project in Gujarat, Indian Journal of Agricultural Economics, vol.XXXIX no.3, July-September 1984.

73. Patel M.R. & Singh S.B. :Utilisation of Pumpsets in Mehsana District,Gujarat State,Indian Journal of Agricultura Economics, vol.XXXIX, no.3, July-September, 1984.

74.Pawar T.Chandrakant : Impact of Irrigation - A Regional Perspective, Himalaya Publishing House, Bombay-4,1989. [Book Review] Indian Journal of Agricultural Economics, vol.XLVI no.1 January-March,1991.

75. Prasad Mata & Tandon R.K. : Transmission System Management, Seminar on Transmission & Distribution, Indian Journal of Power & River Valley Development, March 1984.

76. Puttanna L & Hema K.: Modernization of Gudamgere Tank: A Casestudy, Indian Journal of Agricultural Economics,vol.XXXIX. no.3, July-September,1984.

77. Puttaswamaiah K. : Cost-Benefit Analysis of Irrigation and Drought Proofing, Oxford & IBH Publishing Co. Pvt.Ltd. New Delhi,1989. Indian Journal of Agricultural Economics, vol.XLV no.2, April-June, 1990.

78. Puttaswamy A.L :Present-day Problems of Interconnected Power Systems in India, Seminar on Tranamission & Distribution,Indian Journal of Power & River Valley Development, March 1984.

79. Rajgopal S. : Power Scenario - A Performance Review, Journal of Power & River Valley Development, December 1989.

80. Raju Sunitha : Fertilizer Use and Development of Institutional Infrastructure: A Preliminary Analysis, Economic & Political Weekly, vol. XXV no.26 June 30, 1990.

81. Ratha D.K. & Sharma Atul : Price Subsidies and Irrigation Investment in India, Economic & Political Weekly, vol.XXVII no.39 September 26, 1992.

82. Ray A.K. : Normative Demand for Irrigation and Impact of Irrigation on Income and Employment - A Seasonwise Approach, Indian Journal of Agricultural Economics, vol.XXXIX no.3, July-September, 1984.

83. Sachchidananda & Verma K.K. : Electricity and Social Change, Janaki Prakashan, Patna, 1983.

84. Sangal,S.P. : Pricing of Irrigation Waters in India, Economic & Political Weekly, vol.XXVI no.46 November 16, 1991,pp.2645-2651.

85. Sankhayan P.L. & Singh I.P. : A Comparative Study of the Impact of Surface and Lift Irrigation Systems on the Cropping Pattern,Income Distribution and Economic Efficiency on the Punjab Farms, Indian Journal of Agricultural Economics, vol.XXXIX, no.3, July-September,1984.

86. Sarkar P.C. Munshi A. & Kar S.C. : Women's Role in Production Activities in North Bengal, Indian Journal of Agricultural Economics, vol.LXX,no.276, July 1989.

87. Schenk-Sandbergen Loes : Empowerment of Women: Its Scope in a Bilateral Development Project - A Small-Scale Irrigation Project in North Bengal, Economic & Political Weekly, vol.XXVI no.17 April 27,1991.

88.Senthilnathan S :Labour Use Pattern and Demand for Casual Labour in Crop Production, Journal of Rural Development,vol 10, March 1991.

89. Shah Tushar :Water Markets & Irrigation Development in India, Indian Journal of Agricultural Economics,vol.46, no.3, July-September, 1991.

90. Shand R.T.(ed) : Off-Farm Employment in the Development of Rural Asia,ANU, National Centre for Development Studies, Canberra,1986.

91. Shankari Uma : Tanks : Major Problems in Minor Irrigation, Economic & Political Weekly, vol.XXVI, no.39 September 28,1991.

92. Shetty S.L. : Investment in Agriculture - Brief Review of Recent Trends, Economic & Political Weekly, vol.XXV no.7 & 8,February 17-24,1990.

93. Sidhu D.S,Chand Ramesh & Kaul J.K. : An Economic Analysis of Various Sources of Irrigation in Punjab, Indian Journal of Agricultural Economics, vol.XXXIX no.3, July-September 1984.

94. Singh Abha Lakshmi & Farooque A. : Impact of Irrigation on Cropping Pattern in Western Uttar Pradesh,The National Geographical Journal of India, vol.37, part 4, December 1991.

95. Singh D.V. & Saraswat S.P. :Impact of Irrigation on Cropping Pattern and Farm Income Under Optimal Solution (A Case Study in the Foothills of Himachal Pradesh), Indian Journal of Agricultural Economics, vol.XXXIX, no.3, July-September, 1984.

96. Singh Satyajit K. : Evaluating Large Drams in India, Economic & Political Weekly, vol.XXV no.11, March 17, 1990.

97. Srinivasan T.K. : Closer Operational Integration of EHV and 132 KV,66 KV Networks for High Reliability and Optimum Demand Management, Seminar on Tramission & Distribution- Indian Journal of Power & River Valley Development, March 1984.

98. Thaha A.L. : An Evaluation of Four Rural Electrification Projects Andhra Pradesh, NICD, Rajendranagar, Hyderabad, 1976.

99. Thakur Jawahar & Kumar Praduman :A Comparative Study of Economic Efficiency of Different Irrigation Systems in Western Uttar Pradesh, Indian Journal of Agricultural Economics, vol.XXXIX no.3, July-September 1984.

101.Kuznets Moore & Spenger (eds) : Economic Growth : Brazil,India,Japan,Durham,North Carolina (1955).

102.Unni Jeemol : Agricultural Loburery in Rural Labour Households, 1956-57 to 1977-78, Changes in Employment,Wages and Incomes, Economic & Political Weekly, vol.XXIII no.26 June 25, 1989.

103.Vaidyanathan A. : Labour Use in Rural India - A Study of Spatial and Temporal Variations, Economic & Political Weekly, vol.XXI, no.52 December 27,1986.

104.Varma C.V.J & Rao A.R.G. : Histry of Development of Hydro Power in India, Indian Journal of Power & River Valley Development, April-May,1992.

105.Varma T.B & Sharma F.C. : Power System Management, Indian Journal of Power & River Valley Development, January-February,1986.

106.Venkataraman K. : Power Development of India, Wiley Eastern Private Ltd., New Delhi, 1972.

107.Verma R.S. : Rational Approach to Rural Electrification, Indian Journal of Power & River Valley Development, May 1978.

108.Wade R. : The System of Political and Administrative Corruption: Canal Irrigation in South India, Journal of Development Studies, vol 18,no.3,1982.

109.Withers B & Vipond S. : Irrigation Design and Practice, Cornell University Press, Ithaca, New York, 1980.

REPORTS

1. Technical Report : Series D No.33,Hydrology & Ground Water Potential of Koch Bihar District, Central Ground Water Board,Eastern Region, 1983.
2. Annual Plan on Agriculture, Cooch Behar, 1986-87, Principal Agricultural Office, Cooch Behar.
3. District Census Handbook, Series 23, West Bengal, Part XIII-B Koch Bihar District.
4. Statistical Appendix, Economic Review 1990-91, Government of West Bengal.
5. Mitra A, Census 1951, West Bengal, District Handbooks Cooch Behar, Appendix II, An Account of Land Management in Cooch Behar, 1870-1984.
6. District Plan 1989-90, Cooch Behar District, Office of the District Magistrate.
7. Conference on Regional Development of North Bengal Prospects & Potentials Background Paper, Government of West Bengal, 1986.
8. Over-Exploitation Committee Report, Agricultural Refinance Develo- pment Corporation, 1981.
9. Annual Action Plan 1992-93, Cooch Behar, DRDA.
10. IRDP Guidelines, Government of India.
11. State Level Abstract, Census of Minor Irrigation Schemes in West Bengal,1988,State Water Investigation Directorate (SWID),Government of West Bengal.
12. World Development Report 1989, Washington.
13. India 1988-89 - A Reference Annual, Compiled & Edited by Research & Reference Division, Ministry of Information & Broadcasting, Government of India.
14. Report of the Energy Survey of India Committee (1965), New Delhi.
15. Power Development Programme in the Seventh Plan, Indian Journal of Power & River Valley Development,January-February, 1986, Abstract from the Seventh Five Year Plan, 1985-90, vol.II, Government of India, Planning Commission, New Delhi.
16. CEA, National Power Plan : A Perspective, vol I, 1983.
17. Hindusthan Times, August 17,1991.
18. AIRCRC Report, 1969, Government of India.
19. Sixth Five Year Plan, Planning Commission, 1980.
20. Seventh Five Year Plan, Abstract vol II, Planning Commission, 1985.
21. REC Bulletin vol XI, December-1980, REC, New Delhi.
22. Progress Report, EREB, CEA, November-January 1987.
23. Report of the Barman Commission on Power Generation and Supply, Calcutta - 1975.
24. Annual Statistics, 1989-90, WBSEB.
25. DVC : Harnessing a Great River Valley : Corporate Report, DVC, 1986.
26. Power Scene in West Bengal (Compendium), WBSEB.
27. Bengal Power, House Journal of WBSEB, 1985.
28. Power Statistics 1991-92, Central Statistical Cell, WBSEB.
29. Report on Jaldhaka Hydel Project, WBSEB, 1958.
30. Preliminary Report by George Gruner on the Hydroelectric Power Development in the Districts of Cooch-Behar and Jalpaiguri, Edward & George Gruner Consulting Engineers, Basle, Switzerland, 1950.
31. Jaldhaka H.E.P. Stage-I, Project Report, Survey & Investigation Circle, WBSEB, Kurseong, 1983.
32. Project Report, Teesta Canal Fall Development Hydro-Electric Project, WBSEB, 1979.
33. Feasibility Report of Micro-Mini Hydel Schemes (1st Phase), WBSEB, Survey & Investigation Circle, Kurseong, 1984.
34. Report of Perspective Power Planning Committee (PPPC), Power Perspective for West Bengal 1984-2000 AD., Department of Power, Government of West Bengal, 1984.
35. Load Projection of West Bengal upto 2010 AD Perspective & Analysis, WBSEB, 1988.
36. National Council of Applied Economic Research, Domestic Fuels in Rural India, NCAER, New Delhi, 1965.
37. Report of the Fuel Policy Committee (FPC), Controller of Publications, New Delhi, 1975.